Installation Guide

Select 2007-2018 Chrysler / Dodge / Jeep Models

Equipped WITH OEM Keyless Entry

Kleinn SKU # - RSJK

Years	Dodge Standard Key												
2008-2014	Avenger			9	10	11	12						
2008-2012	Caliber			9	10	11	12						
2007-2011	Dakota			9	10	11	12						
2007-2009	Durango			9	10	11	12						
2008	RamTrucks			9	10	11	12						
2007-2011	Nitro	07	08	09	10	11							
Years	Jeep Standard Key												
2008-2017	Compass		08	09	10	11	12	13	14	15	16	17	
2008-2013	Liberty		08	09	10	11	12	13					
2007-2017	Patriot	07	08	09	10	11	12	13	14	15	16	17	
2007-2018	Wrangler	07	08	09	10	11	12	13	14	15	16	17	18
Years	Chrysler Standard Key												
2011-2014	200					11	12	13	14				
2007-2009	Aspen	07	08	09									

Introduction:

Automatic transmission vehicles manufactured for sale in the US and Canada.Only

- This is a pre-wired plug and play kit and all the required connections have been made within the harness.
- We have already loaded the correct firmware into the remote start module. You will need to pair the module to your vehicle when the installation is complete. Programming Instructions begin at Step 3.
- This remote start will monitor the vehicle lock circuit and use the pulses generated by pressing lock 3 times on your OEM remote to start the vehicle.

Disclaimer:

Neither the manufacturer nor the distributor of these components are responsible for damages of any kind either indirectly or directly caused by the components, except for the replacement of the components in case of manufacturing defects. This guide is subject to change without notice. Refresh your browser cache or use different browser (Edge, Chrome, Firefox, etc.) to view the latest update.

Remote Start Activation:

Remote Starter Activation: Press Lock>Lock>Lock on your OEM remote to start the vehicle.
(If your Jeep is not equipped with keyless entry or for increased activation range, you can upgrade to the Kleinn RFKIT, RFKIT2W, RFKIT4, or MOBILE2W Smartphoone kits)

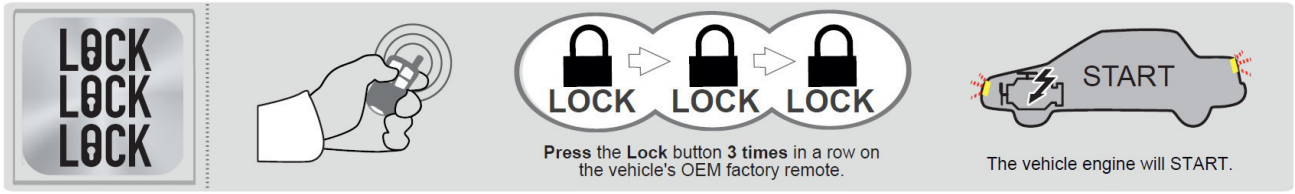

Check out our extended range RF Remote or Smartphone Control upgrade kits

Click Here for Upgrade Options

- **Firmware pre-loaded:** As part of the service Kleinn provides, we have pre-flashed the compatible firmware version and options into your **HCX** module for you so you are ready to begin the installation in the vehicle. You will need to program the module to the vehicle when the installation



Parts Required:

- Idatalink HCX Module Pre-Flashed (RSA CH5) Firmware
- T-Harness HCX-CH5

Overview

There are 5 basic steps to this remote start installation:

1. **Preparation**
2. **Wiring**
3. **Programming**
4. **Testing the system**
5. **Finishing up!**

STEP 1: Preparation

This remote start kit is a **PLUG & PLAY INSTALLATION TYPE**. This kit uses a plug-in T-Harness which eliminates any hardwired "wire-to-wire" connections that are typically required. The physical attachment of this product will require only plug-in connections. Simply plug the T-Harness into the vehicle, then program the module and the remote starter will be ready for use.

- Any vehicle panels required to gain access to the needed plugs outlined in this Tip Sheet will need to be removed. The bulk of the installation typically takes place in the driver's side under dash area. You may need to access the passenger side under dash area for some vehicles. Refer to the Wire Diagram for the locations that need to be accessed in the vehicle. Remember the order that you remove the panels.

- Wait to mount the remote start component(s) in the vehicle until after you have completed the wiring and have tested the system. Keep in mind where you plan to mount the component(s) when routing your wires to avoid having to unplug after programming. The component(s) can be mounted to a rigid wire bundle under the dash using zip ties. Look for an open and convenient location in the vehicle that will fit the component(s). Pay attention to moving parts like the pedals, e-brake and steering column. Be sure to route your wiring away from those areas. It is best to route your wires along with the vehicles factory wires, as this is typically a safe location and it keeps the install neat.

- If your T-harness has loose wires with no plugs at the end they will not be needed for standard installation in this application. Tape up any extra wires or tuck them away with the T-harness and isolate them so they are not in the way. Adding options may require additional wiring connections.

T-HARNESS CONNECTION LOCATION

This guide covers multiple models but the connector location will all be at the ignition. This guide shows disassembly of the Wrangler, other models covered also have 3 screws that under the steering column that need to be removed. Then separate the column shroud and access the ignition connector in the image. Use caution removing the original connector and re-inserting the t-harness connector, the module is very sensitive.





Steering Column Disassembly

This kit comes with a T-Harness that plugs into your vehicles immobilizer plug. The immobilizer is the plastic ring around the edge of the key cylinder that reads your key code and transmits the code to the vehicles BCM. You will see a plug attached to this ring. You will first need to remove the plastic shroud from around the steering column to gain access.

The bulk of the installation takes place right under the dash on the drivers side. Begin by removing the plastic panel below the steering wheel and then the plastic shroud around the steering wheel column. Remove the 3 screws shown below and loosen the tilt lever and pull the lower plastic panel down. Be careful not to break the panel, espesially in colder weather.

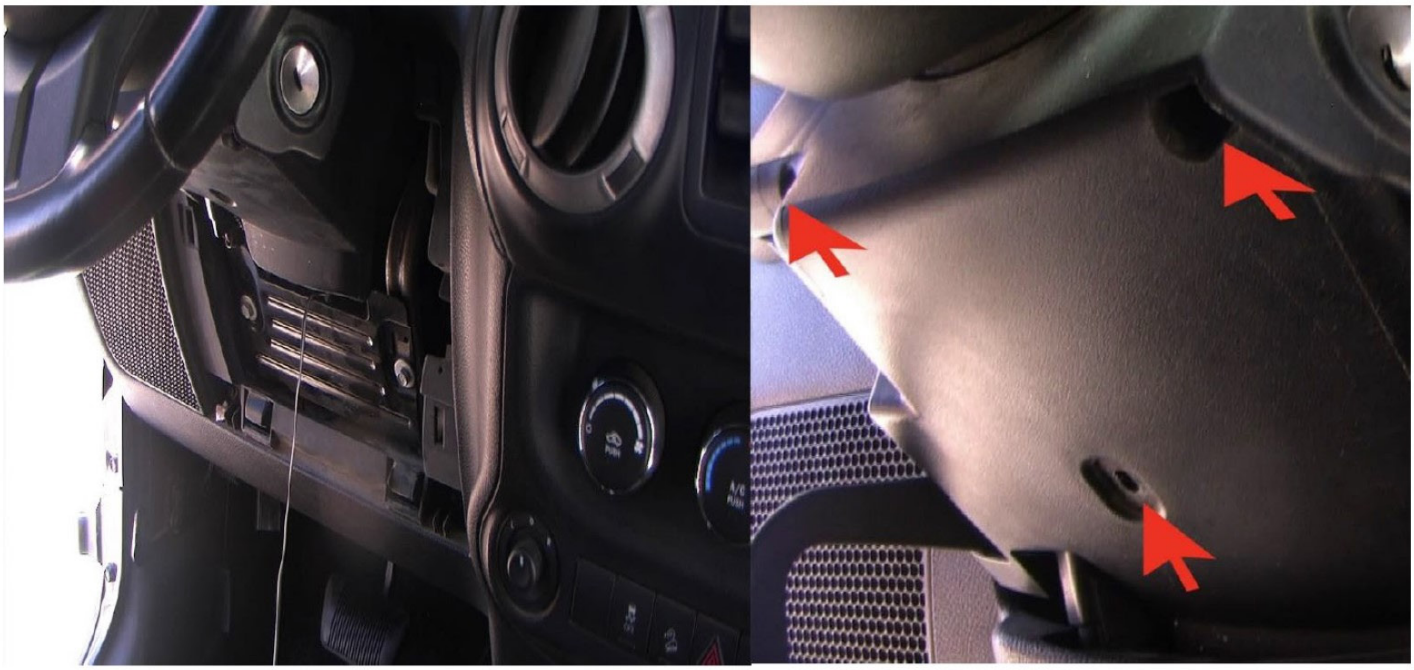

2016-2018 Wrangler Steering Column Disassembly

Some 2016 and all 2017+ models have a lip that goes under the steering wheel. You must push the panel forward to remove it. Use a plastic panel puller tool to wedge in between the steering wheel and the steering wheel cover to get the lip around the corner so you can pull it down and remove it without remove the steering wheel.
As shown below.



Steering Column Disassembly

To access the ignition plug for the t harness installation you will need to remove the lower dash panel and the steering column cover as shown below.

1. Remove the 2 screws from the bottom of the lower dash panel. Then using a panel removal tool, separate the lower dash panel and remove from the dash.

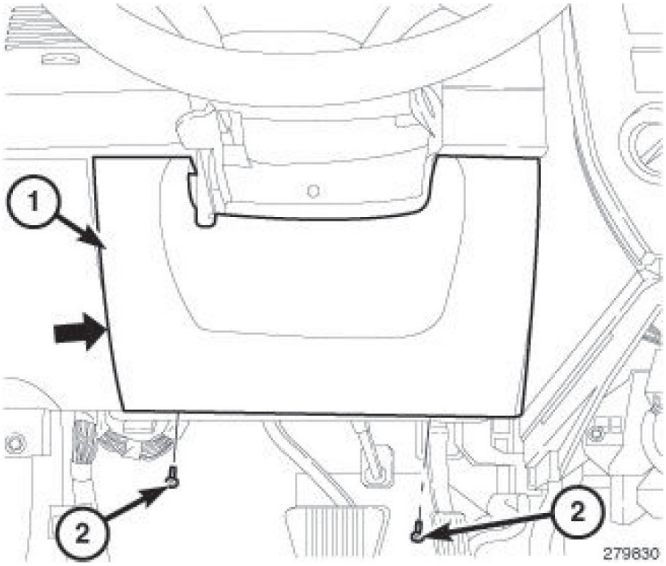

2. Remove the 2 screws (4) in the lower steering column cover. Then unclip the covers by applying pressure along the seams. Remove the upper cover. Remove the screw (3) attaching the lower cover to the steering column and remove the cover.

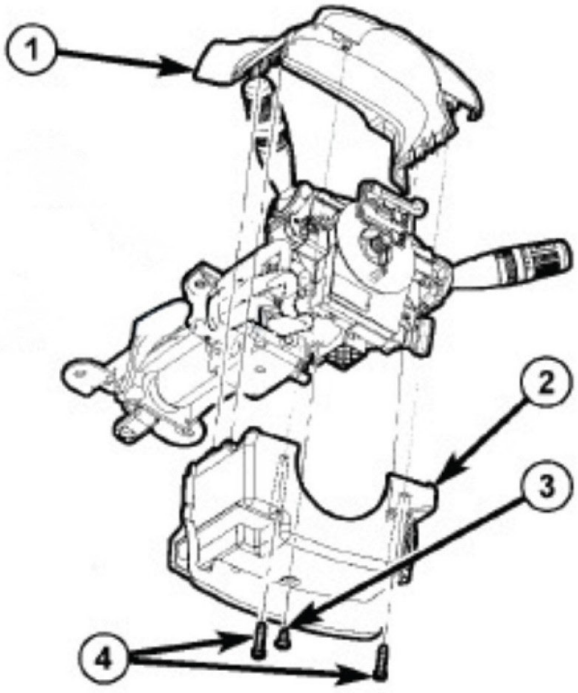

3. Locate the Transponer connector (1) at the switch. Unplg the fcatory 8-pin connector and plug it into the 8-pin Female T-Harness connector. Plug the Male 8-pin connector from the T-Harness into the fcatory Transponder plug.

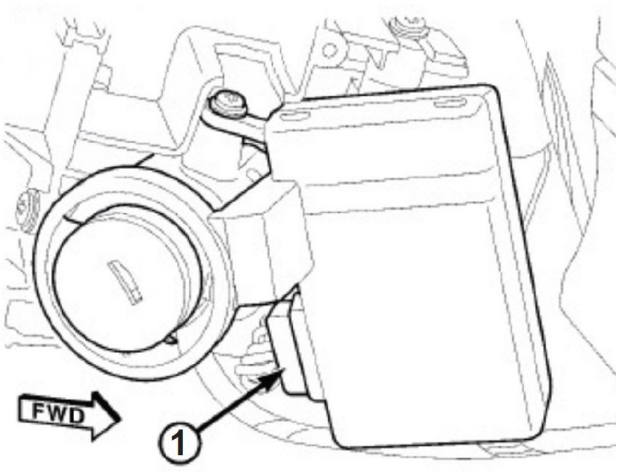

STEP 2: Wiring Connections Overview

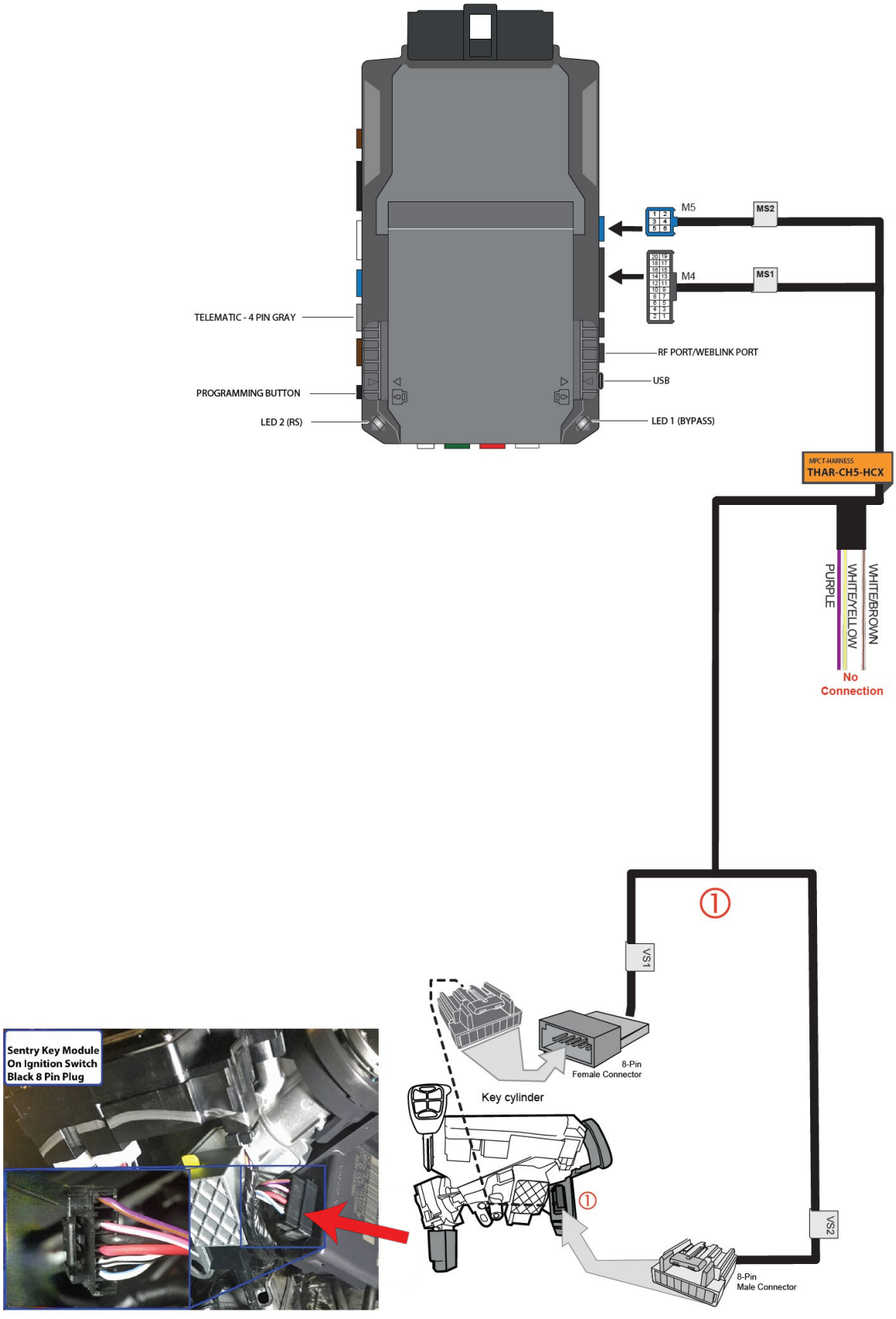

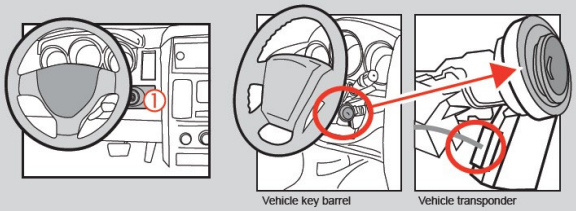

① **Vehicle transponder connector**
Back view

CAUTION
TAKE CARE WHEN DISCONNECTING THE HARNESS FROM THE IGNITION BARREL. IT IS VERY FRAGILE AND CAN EASILY BREAK.

STEP 2.1: Connect the T-harness

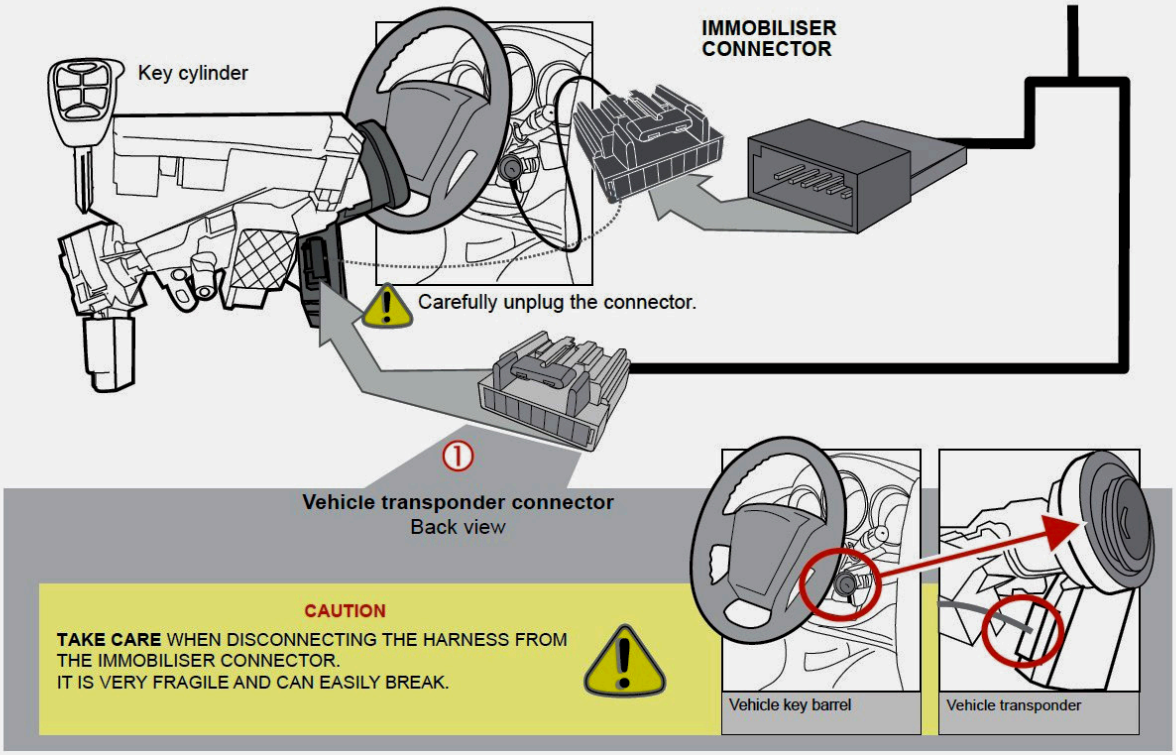

NOTE:

Make sure no pins get pushed out of the immobilizer connector. The Immobilizer module is very delicate, there are two thin wires wrapped around inside the transponder ring. If too much pressure is applied, you will break the wire connection and the car will not start with the key anymore until either repair or replace the broken module.

Step3: Program the Module

Your Remote Start module now needs to be paired to your vehicle. Before starting the programming sequence, make sure that all of the connectors are plugged into the module. Instructions for programming the Remote Start are below. Here are two important tips to help you avoid common mistakes:

- Follow the programming instructions for the LED1 and LED2 descriptions to monitor flashes.



01 

Close driver door. Re-open drivers door to wake up data bus.

02 

Turn key to ON position.

03 

Wait, LED 1 will turn solid RED to confirm the ignition is ON.

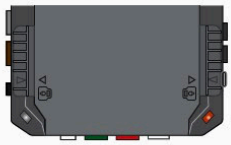

04 

Wait 5 seconds, LED 1 will flash GREEN rapidly.

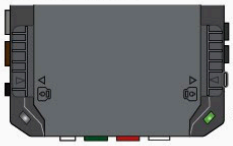

05 

Turn key to OFF position.

06 

Press UNLOCK on the OEM remote. If vehicle is not equipped with OEM remote. press the module program button 1 time.

07 

Wait, LED 1 will turn solid GREEN for 2 seconds.



08 

START vehicle and let it run for 15 seconds.

09 

Press and hold the brake pedal.

10 

Press and release the module's programming button.

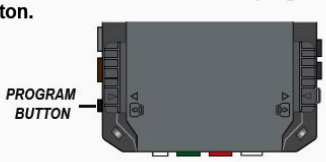

11 

Release the brake pedal.

12 

Wait, LED 2 will flash GREEN.



Module Programming Complete

Programming Add on RF Remote Upgrade Kits RFKIT1-2W-4

>>

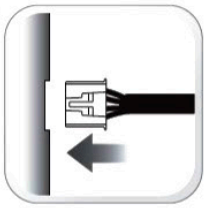

Plug the antenna into the RF/Weblink port of the module (4 pin black).

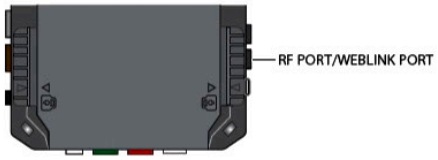

01



WARNING: Complete the module programming procedure and tach programming procedure before programming the remotes. A maximum of four [4x] aftermarket remotes per system.

02



Set ignition to ON position.

03



Press and release the antenna button, then press and hold the antenna button. The antenna's LEDs will turn ON solid.

04



Parking Light will flash once [1x]. The HCX brain will click [1x].

05



While holding the antenna button, press once [1x] on the START button of each aftermarket remote

06



The antenna's LEDs will flash once [1x] for each successful pairing.

07



Release the antenna button. The antenna's LEDs will turn OFF.

08



Set ignition to OFF position.

09



Remote Programming Procedure completed.

Step 4: Finishing up!

After confirming that everything works properly, cap off or tape the ends of any wires you're not using to avoid grounding or other contacts.

- Now gather up all the wiring and neatly bundle it together using zip ties or electrical tape to prevent the wires from interfering with any of the moving parts under the dash.
- Find a secure place to put the remote start module and use zip ties to secure it. Be careful not to zip tie near your connections as it may create a bad connection.
- Replace any interior vehicle panels that were removed to gain access to the needed wires, in reverse order that they were removed.
- Test the system as you reinstall the panels in your vehicle to make sure you do not pull something loose or pinch a wire. Be careful not to run a screw through a wire or pinch a wire while reinstalling panels.
- If your test was unsuccessful, go back and re-check your wiring and programming. Make sure the connections are tight with no bent pins or pulled wires and follow the programming steps again closely.

Vehicle Take Over Procedure

This system will run for 15 minutes then turn off. If you approach the vehicle while it is still running, unlock the doors, enter the vehicle and close the door, put the key in and turn the ignition on and drive away.

01 

All vehicle doors must be closed and locked prior to remote start sequence.

02 

Press the Lock button 3 times on the vehicles OEM factory remote.

03 

The vehicle engine will start.

04 

Press Unlock on OEM remote.

05 

Open driver door and enter vehicle.

06 

Close driver door.

07 

Insert key into ignition.

08 

Turn key to ON position.

08 

Press and release BRAKE pedal.

10 

The vehicle can now be put in to gear and driven..

If you have any installation questions or problems, you can create a support ticket for help at:

install.kleinn.com/support

Kleinn Automotive Accessories

520-579-1531

Copyright 2026 Kleinn Automotive Accessories

Troubleshooting Charts

When the system receives an activation command and you hear clicks from the HCX remote start module brain but the vehicle fails to start, Parking lights flash and HCX brain will click 3x times followed by a number of flashes and clicks for the diagnostics code. The second number of flashes/clicks corresponds to a remote start diagnostic error code. This will tell you why the remote starter is failing to start. The codes are as follows:

REMOTE STARTER ERROR CODES: NOTES	PARKING LIGHT FLASHES	DIAGNOSTIC
I WARNING: The following applies only when the parking lights are connected and supported by the system. II After a remote starter failure, the parking lights will flash three [3x] times followed by the error code. See table.	3 + 1	Tach is not programmed OR engine is already running.
	3 + 2	Key is in ignition ON position.
	3 + 3	Door is open.
	3 + 4	Trunk is open.
	3 + 5	Foot brake is ON.
	3 + 6	Hood is open.
	3 + 7	Loop is not cut.
	3 + 8	Vehicle failed to remote start.
	3 + 9	Vehicle movement detected (VSS).
	3 + 10	System is in Valet Mode.
	3 + 11	CAN communication failure
	3 + 12	RS not synchronized. Start vehicle with OEM key for 15 sec before trying a new RS sequence.
	3 + 13	Bypass problem.
	3 + 14	Idle mode or takeover is not available on this vehicle.
	3 + 15	Overheat protection.

REMOTE STARTER SHUTDOWN ERROR CODES: NOTES	PARKING LIGHT FLASHES	DIAGNOSTIC
I WARNING: The following applies only when the parking lights are connected and supported by the system. II If the engine shuts down after a remote starter sequence use the query command from a compatible aftermarket remote to display the shutdown error code. The parking lights will flash four [4x] times followed by the error code. See table.	4 + 1	Engine tach signal was lost.
	4 + 2	Emergency brake signal was lost.
	4 + 3	Foot brake ON detected.
	4 + 4	Hood open detected.
	4 + 5	Tach over rev detected.
	4 + 6	Glow plug timeout error.
	4 + 7	Vehicle movement detected (VSS).
	4 + 8	Check engine light ON.
	4 + 9	Low fuel level.
	4 + 10	Open door detected.
	4 + 11	CAN communication failure during RS sequence.
	4 + 12	RS not synchronized. Start vehicle with OEM key for 15 sec before trying a new RS sequence.
	4 + 13	Bypass problem.
	4 + 14	Idle mode or takeover is not available on this vehicle.
	4 + 15	Overheat protection.

MODULE STATUS DURING:	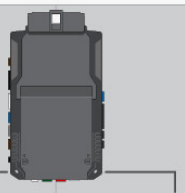 LED 2*	LED 1**	LED STATUS	DIAGNOSTIC
REMOTE START SEQUENCE	●		Flashing rapid RED	Remote start shutdown sequence.
	●		Flashing slow RED	Remote start shutdown error code. Contact technical support.
	●		Solid RED	Remote start crank delay.
	●		Flashing rapid GREEN	Remote start cycle in progress. Working correctly.
	●		1 GREEN flash	Remote start initiated successfully.
	●		3 GREEN flashes	Idle mode cycle in progress.
	●		4 GREEN flashes	Turbo mode cycle in progress.
		●	Flashing GREEN	Remote start cycle in progress. Displays vehicle platform during runtime.
		●	Rapid GREEN flashing	Secure takeover initiated. Waiting to complete takeover after brake press.
TRANSMITTER PROGRAMMING	●		Solid RED	Remote programming in progress, waiting for remote pairing.
	●		1 GREEN flash	Remote programmed.
	●		4 RED flashes	Shutdown remote starter before attempting remote programming.
	●		5 RED flashes	Engine must be off before attempting remote programming.
	●		6 RED flashes	System must be unlocked/disarmed before attempting remote programming.
	●		7 RED flashes	Module must be learned to the vehicle before attempting remote programming.

* LED 2 (RS) displays generic diagnostic codes specific to the remote start module. Orange LED flashes may appear red.
** LED 1 (Bypass) displays diagnostic codes specific to the firmware loaded on the module.
Visit the programming diagnostics page for more information.