Installation Guide

Select 2010-2026 Buick / Chevy / Cadillac / GMC Push-to-Start Models

Kleinn SKU # - RSGM6

Years	GMC (Push-to-Start)																
2017-2023	Acadia							17	18	19	20	21	22	23			
2019-2021	Sierra 1500									19	20	21					
2022	Sierra 1500 Limited												22				
2020-2023	Sierra 2500 / 3500										20	21	22	23			
2018-2024	Terrain								18	19	20	21	22	23	24		
2015-2020	Yukon						15	16	17	18	19	20					
Years	**Buick (Push-to-Start)**																
2017-2025	Encore							17	18	19	20	21	22	23	24	25	
2017-2020	Envision							17	18	19	20						
2010-2019	LaCrosse	10	11	12	13	14	15	16	17	18	19						
2011-2019	Regal		11	12	13	14	15	16	17	18	19						
2012-2017	Verano			12	13	14	15	16	17								
Years	**Cadillac (Push-to-Start)**																
2013-2019	ATS				13	14	15	16	17	18	19						
2013-2016	CTS-V				13	14	15	16									
2016-2018	CT6							16	17	18							
2019-2023	XT4										19	20	21	22	23		
2017-2024	XT5								17	18	19	20	21	22	23	24	
2020-2024	XT6											20	21	22	23	24	

Years	Chevy (Push-to-Start)																	
2019-2025	Blazer									19	20	21	22	23	24	25		
2016-2023	Bolt						16	17	18	19	20	21	22	23				
2016-2024	Camaro						16	17	18	19	20	21	22	23	24			
2016-2019	Corvette						16	17	18	19								
2012-2019	Cruze			12	13	14	15	16	17	18	19							
2018-2024	Equinox									18	19	20	21	22	23	24		
2014-2020	Impala					14	15	16	17	18	19	20						
2013-2025	Malibu				13	14	15	16	17	18	19	20	21	22	23	24	25	
2019-2021	Silverado 1500										19	20	21					
2022	Silverado 1500 Limited													22				
2020-2023	Silverado 2500 / 3500											20	21	22	23			
2017-2020	Sonic							17	18	19	20							
2016-2022	Spark						16	17	18	19	20	21	22					
2015-2020	Suburban					15	16	17	18	19	20							
2015-2020	Tahoe					15	16	17	18	19	20							
2017-2025	Trax							17	18	19	20	21	22	23	24	25		
2021-2026	Trailblazer											21	22	23	24	25	26	
2018-2024	Traverse								18	19	20	21	22	23	24			

Automatic transmission vehicles manufactured for sale in the US and Canada Only

Introduction:

- This guide covers multiple GM models, see the page that matches your model for location images.
- This is a pre-wired plug and play kit and all the required connections have been made within the harness.
- We have already loaded the correct firmware into the remote start module. You will need to pair the module to your vehicle when the installation is complete. Programming Instructions begin at Step 3.
- This remote start will monitor the vehicle lock circuit and use the pulses generated by pressing lock 3 times on your OEM remote to start the vehicle.

Disclaimer:

Neither the manufacturer nor the distributor of these components are responsible for damages of any kind either indirectly or directly caused by the components, except for the replacement of the components in case of manufacturing defects. This guide is subject to change without notice. Refresh your browser cache or use different browser (Edge, Chrome, Firefox, etc.) to view the latest update.

Remote Start Activation:

Remote Starter Activation: Press Lock>Lock>Lock on your OEM remote to start the vehicle.
(If your vehicle is not equipped with keyless entry or for increased activation range, you can upgrade to the Kleinn RFKIT, RFKIT2W, RFKIT4, or MOBILE2W Smart Phone kits to activate remote start)

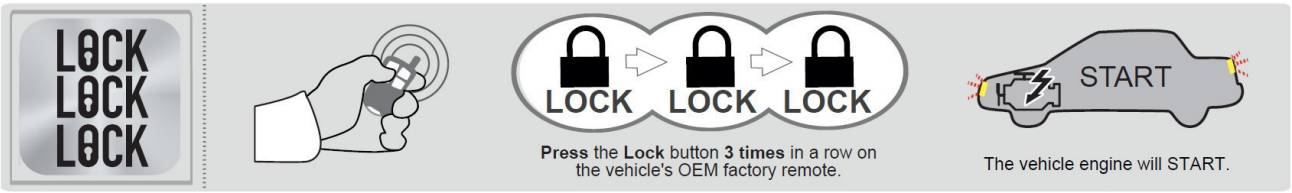

Check out our extended range RF Remote or Smartphone Control upgrade kits

Click Here for Upgrade Options

- **Firmware pre-loaded:** As part of the service Kleinn provides, we have pre-flashed the compatible firmware version and options into your **HCX** module for you so you are ready to begin the installation in the vehicle. You will need to program the module to the vehicle when the installation is complete.



Parts Required:

- Idatalink HCX Module Pre-Flashed (RSA GM8) Firmware
- T-Harness HCX-GM13-USBC

Overview

There are 5 basic steps to this remote start installation:

Step1: Preparation

Step 2: Wiring Connections **Chevy, GMC Sierra / Yukon - Pages 4-17**

GMC Acadia / Terrain - Pages 18-19,

Buick - Pages 20-24,

Cadillac - Pages 25-29

Step 3: Programming **- Pages 30-33**

Step 4: Take Over Procedure - **Page 34**

Diesel Delay Setting - Pages 35-37

STEP 1: PREPARATION

This remote start kit is a **PLUG & PLAY INSTALLATION TYPE** utilizing custom T-Harnesses which eliminate the "wire-to-wire" connections typically required. The physical attachment of this product will require only plug-in connections unless RAP shutdown or Keyless Entry control from RF remotes or Smartphone upgrade kits are desired. Simply plug the T-Harness into the vehicle, then program the module and the remote starter will be ready for use.

- Any vehicle panels required to gain access to the needed plugs outlined in this Tip Sheet will need to be removed. The bulk of the installation typically takes place in the driver's side under dash area. You may need to access the passenger side under dash area for some vehicles. Refer to the Wire Diagram for the locations that need to be accessed in the vehicle. Remember the order that you remove the panels.
- Wait to mount the remote start component(s) in the vehicle until after you have completed the wiring and have tested the system. Keep in mind where you plan to mount the component(s) when routing your wires to avoid having to unplug after programming. The component(s) can be mounted to a rigid wire bundle under the dash using zip ties. Look for an open and convenient location in the vehicle that will fit the component(s). Pay attention to moving parts like the pedals, e-brake and steering column. Be sure to route your wiring away from those areas. It is best to route your wires along with the vehicles factory wires, as this is typically a safe location and it keeps the install neat.
- If your T-harness has loose wires with no plugs at the end they will not be needed for standard installation in this application. Tape up any extra wires or tuck them away with the T-harness and isolate them so they are not in the way. Adding options may require additional wiring connections.

Download Weblink KLON Programming Software

We have preloaded the firmware and settings to allow the first step of programming in the vehicle but this type of anti-theft system requires a final “KLON” programming process that can only be done after the installation is complete and the Remote Start has read your key code during the programming step. You will need to download, install, and save this program to your PC to do this. You will need a Windows or MAC computer with internet access and a USB port. Download it in preparation for KLON steps shown after Step 3 is complete.

Click Here for Weblink Software

Login with this username: **flash@mypushcart.com**

Use this password: **MPCflash2025!**

STEP 2: WIRING CONNECTION OVERVIEW

The two t-harness connections are the same on all models covered in this guide, however the location varies by model. This overview reflects Silverado, Sierra, Yukon, Suburban. See the following pages to find your vehicles BCM location.

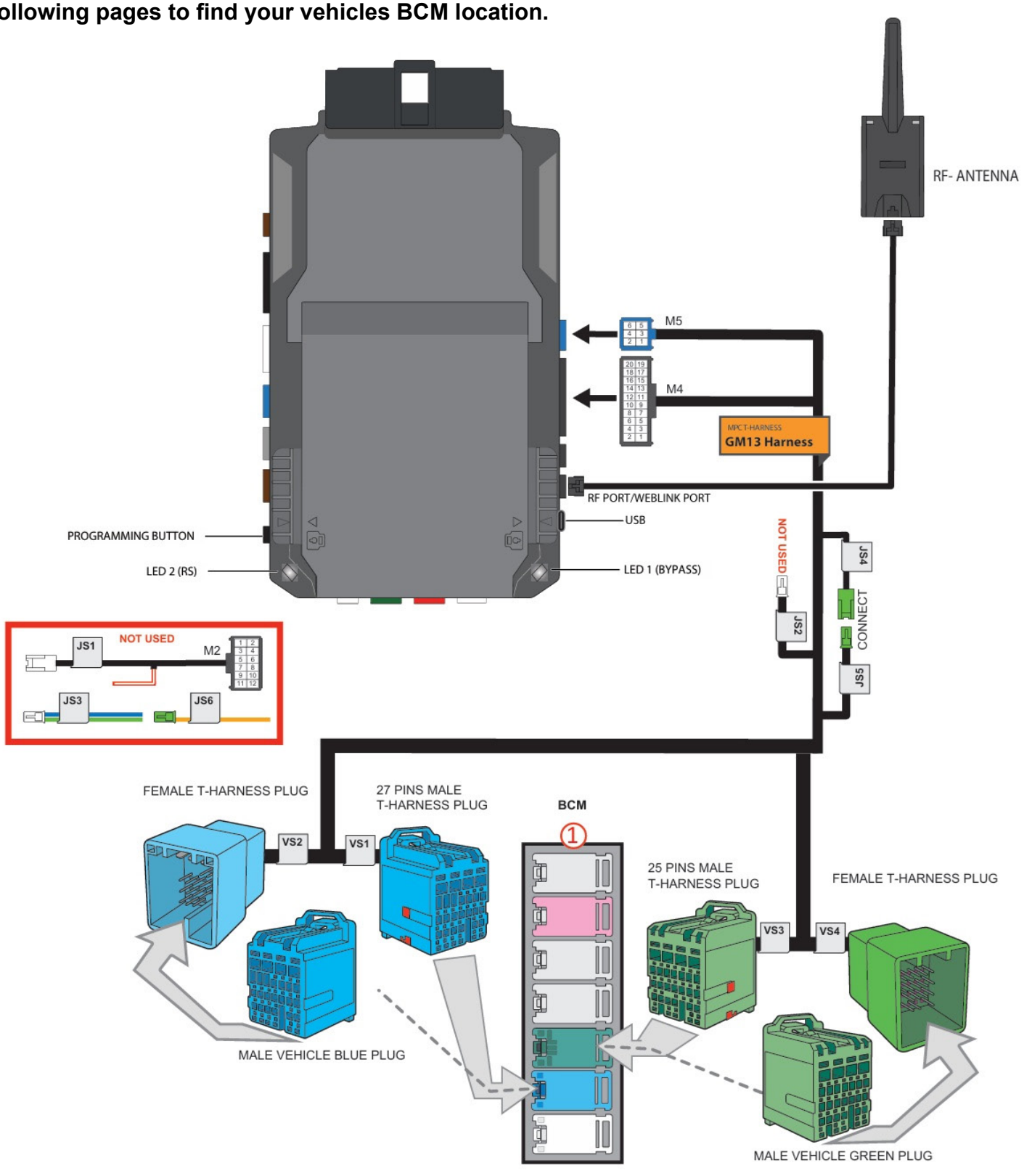

① **BCM** - to the left of the steering column

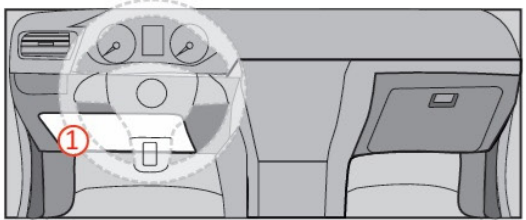

Accessing the BCM Connectors

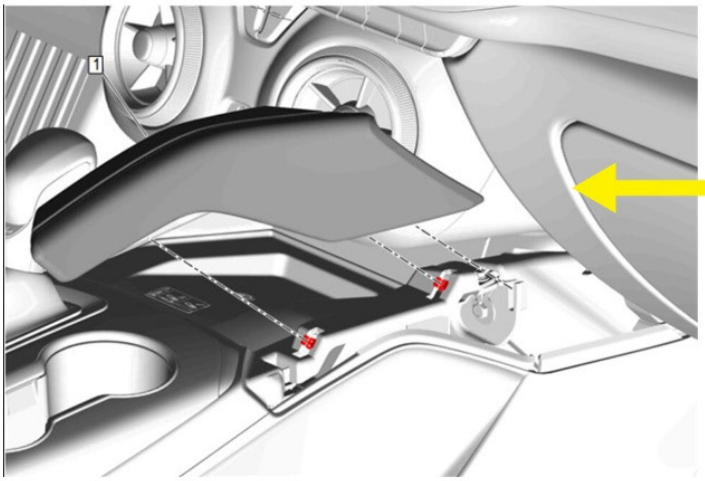

The BCM is located on the floor beneath the front of the center console, to access it you'll need to remove the passenger side console trim.

Step 1: Remove the trim on the top passenger side of the console.

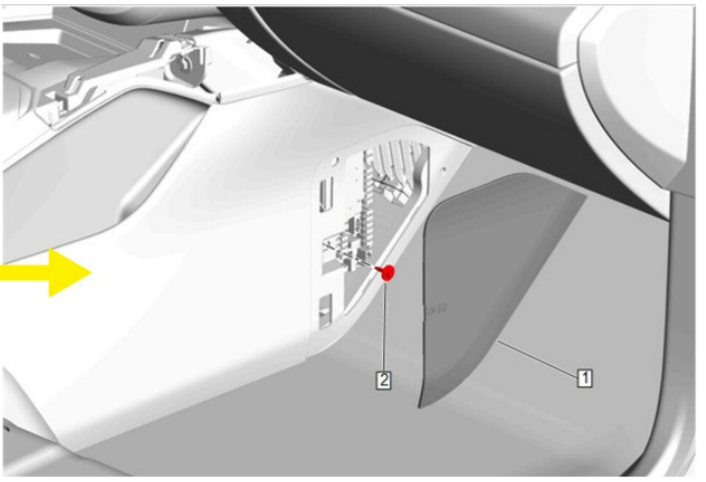

Step 2: Remove the fuse box access panel and remove a single screw from the rear of the opening.

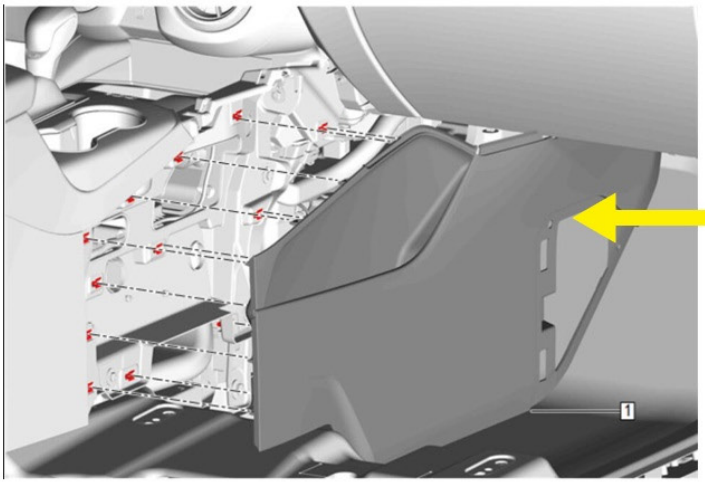

Step 3: Work your way from the rear of the panel forward releasing the pop clips with the aid of a panel removal tool.

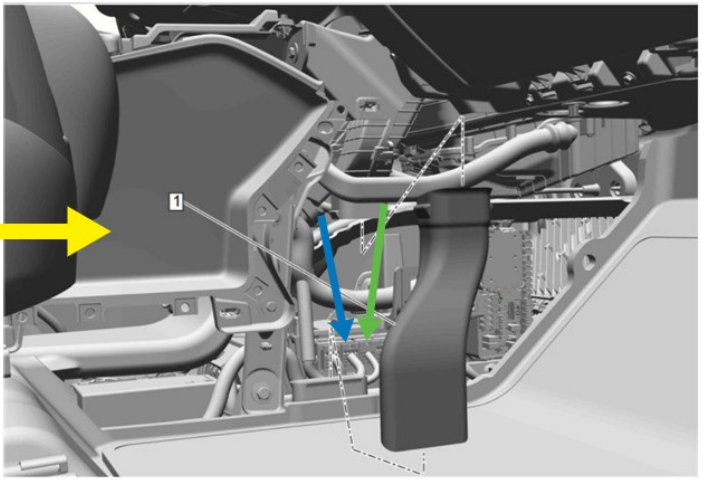

Step 4 (optional): The floor vent extension may be blocking access to the connectors we need, it can be removed easily for better access.

Use the VS1 and VS2 connectors to connect into the Blue connector (2nd from left) on the BCM.

Use the VS3 and VS4 connectors to connect into the Green connector (3rd from left on the BCM.

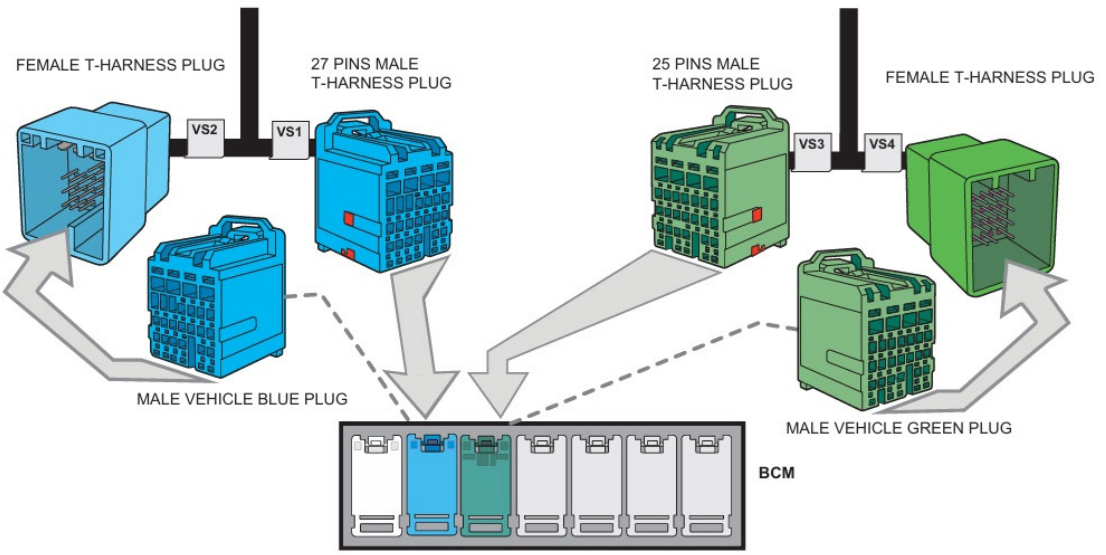

Accessing the BCM Connectors

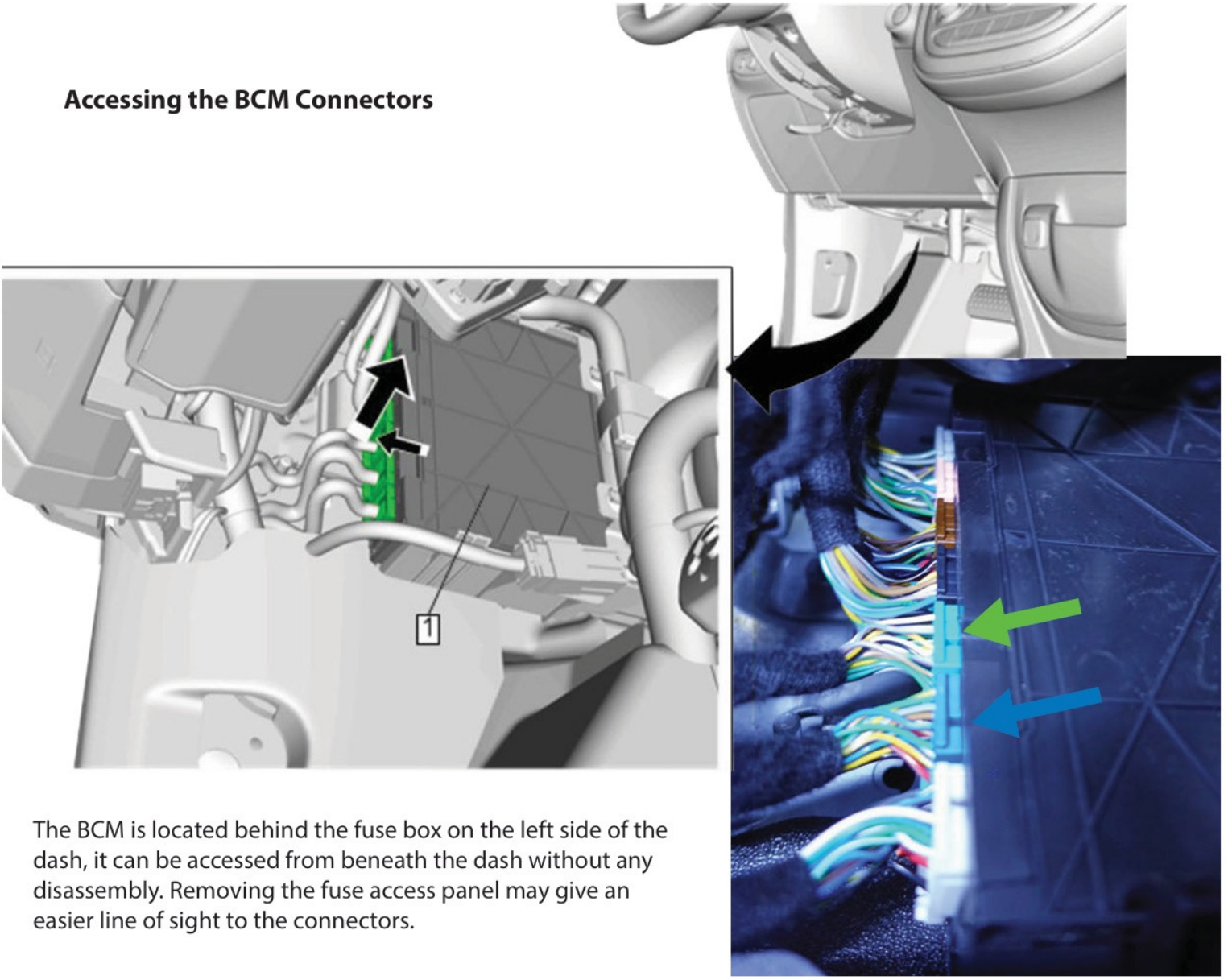

The BCM is located behind the fuse box on the left side of the dash, it can be accessed from beneath the dash without any disassembly. Removing the fuse access panel may give an easier line of sight to the connectors.

Use the VS1 and VS2 connectors to connect into the Blue connector (2nd from left) on the BCM.

Use the VS3 and VS4 connectors to connect into the Green connector (3rd from left on the BCM.

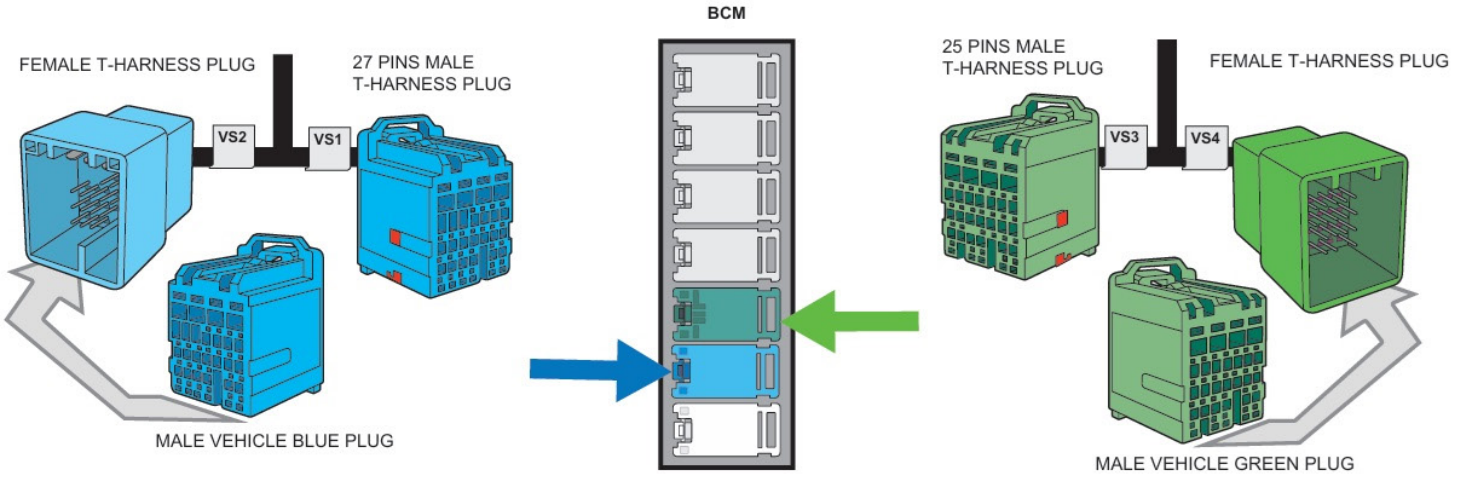

Accessing the BCM Connectors

The BCM is located behind and to the right of the OBD2 port with connectors facing downward, you should be able to access the necessary connections without any vehicle disassembly.

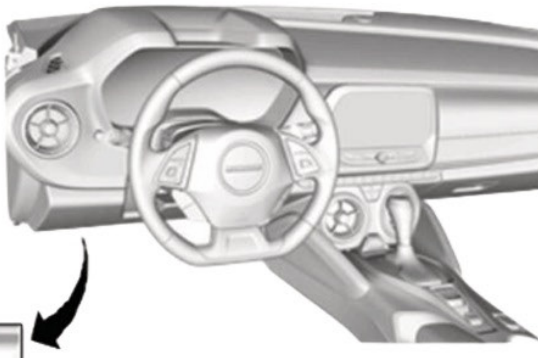

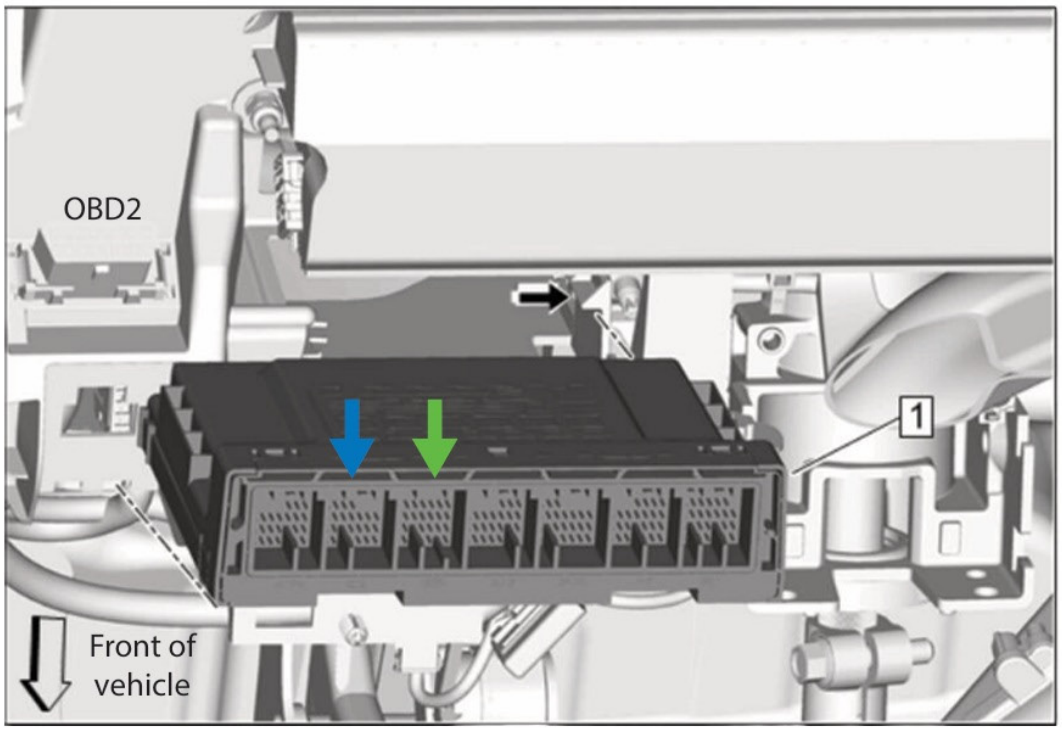

Use the VS1 and VS2 connectors to connect into the Blue connector (2nd from left) on the BCM.

Use the VS3 and VS4 connectors to connect into the Green connector (3rd from left) on the BCM.

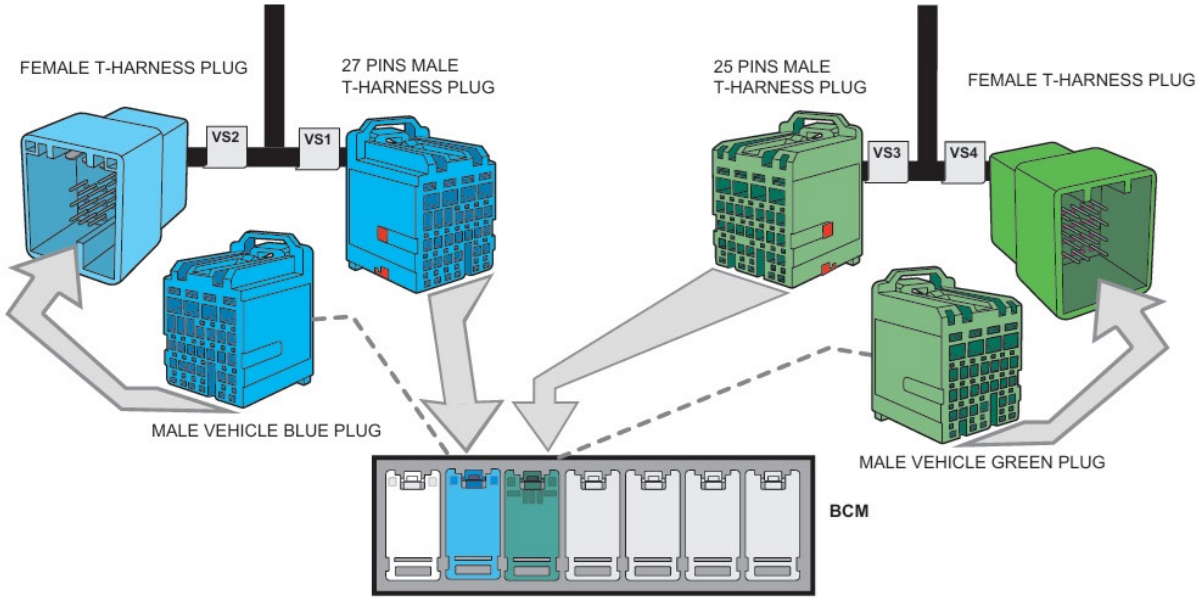

Accessing the BCM Connectors

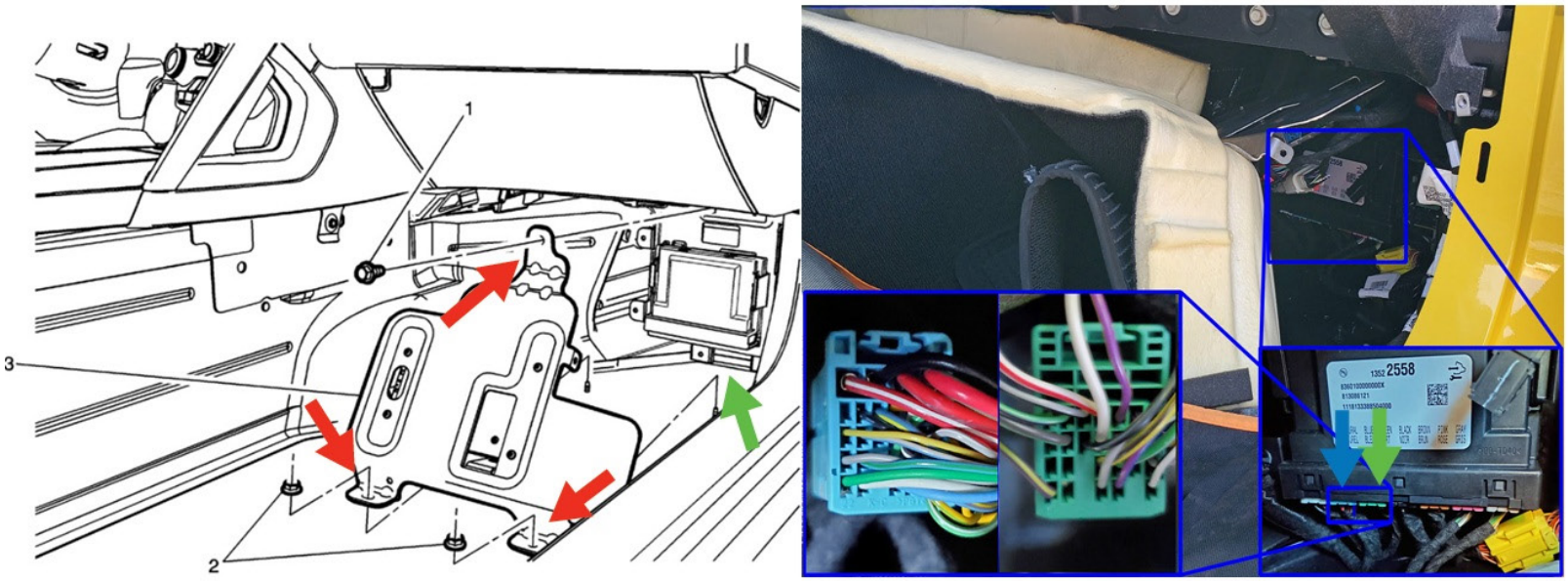

The BCM is located at the front of the passenger footwell, to access it you'll need to move the vehicle data recorder mounting bracket.

Begin by pulling the carpeting back from the firewall.

The Vehicle Data Recorder bracket is held in place with a single bolt at the top and two nuts at the bottom. Remove these three fasteners and position the assembly aside to access the connectors on the BCM.

Use the VS1 and VS2 connectors to connect into the Blue connector (2nd from left) on the BCM.

Use the VS3 and VS4 connectors to connect into the Green connector (3rd from left) on the BCM.

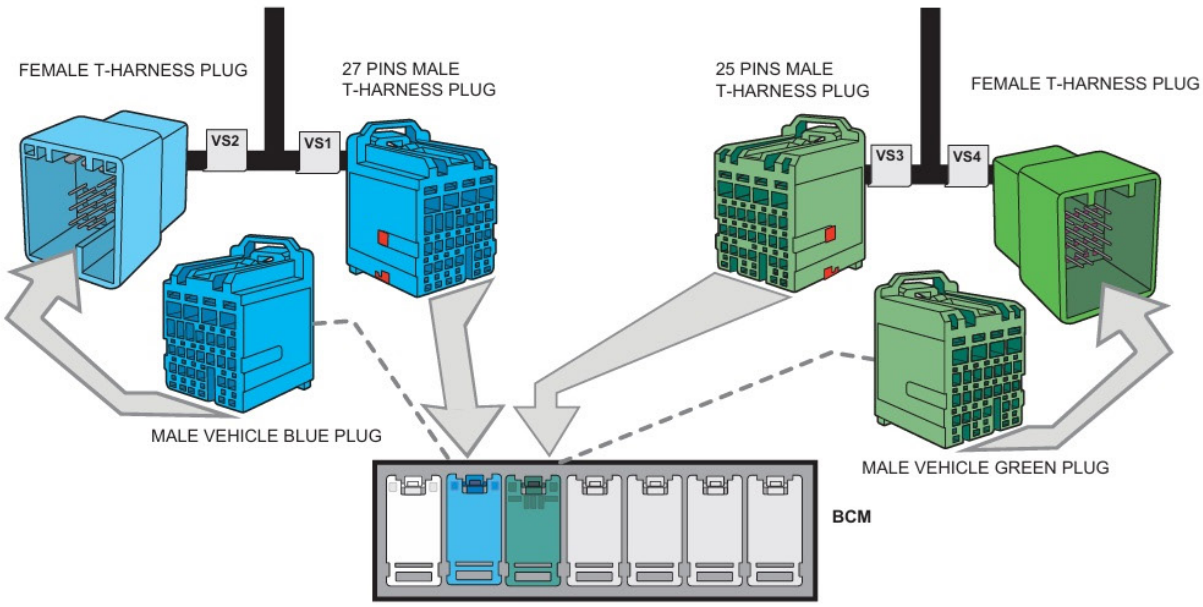

Accessing the BCM Connectors

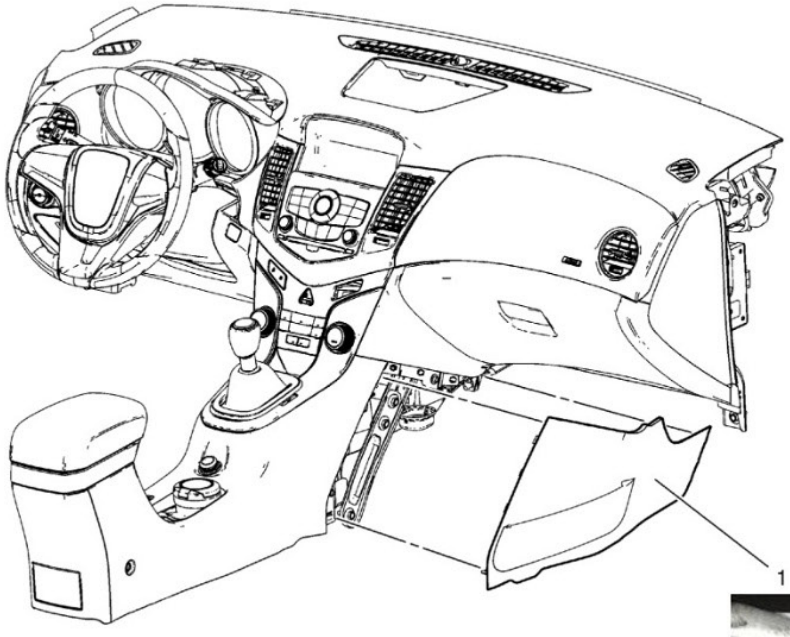

The BCM is located beneath the front of the center console. To access it remove the passenger side center console trim panel by popping the three (3x) clips loose with the aid of a panel removal tool

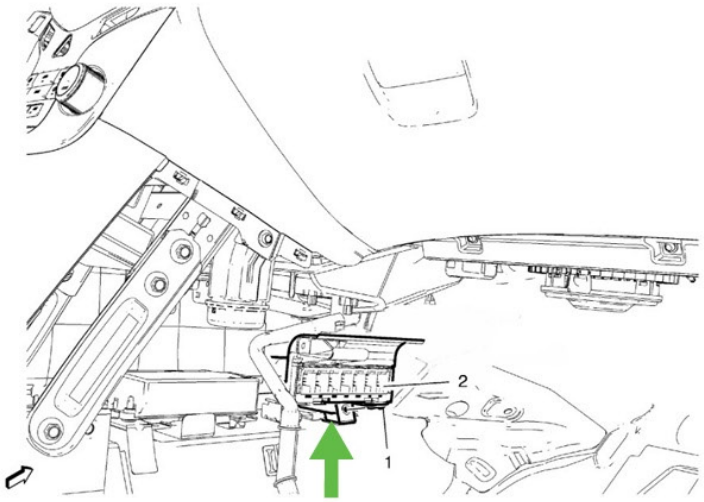

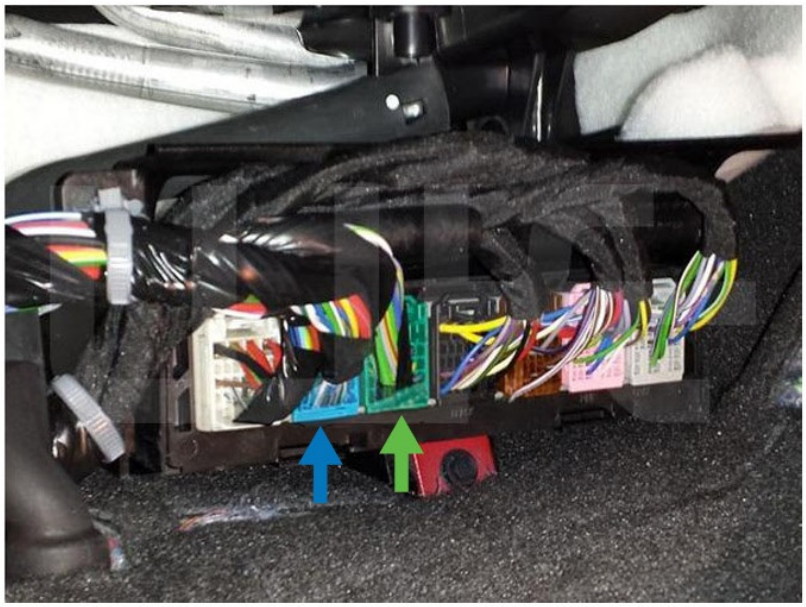

Use the VS1 and VS2 connectors to connect into the Blue connector (2nd from left) on the BCM.

Use the VS3 and VS4 connectors to connect into the Green connector (3rd from left) on the BCM.

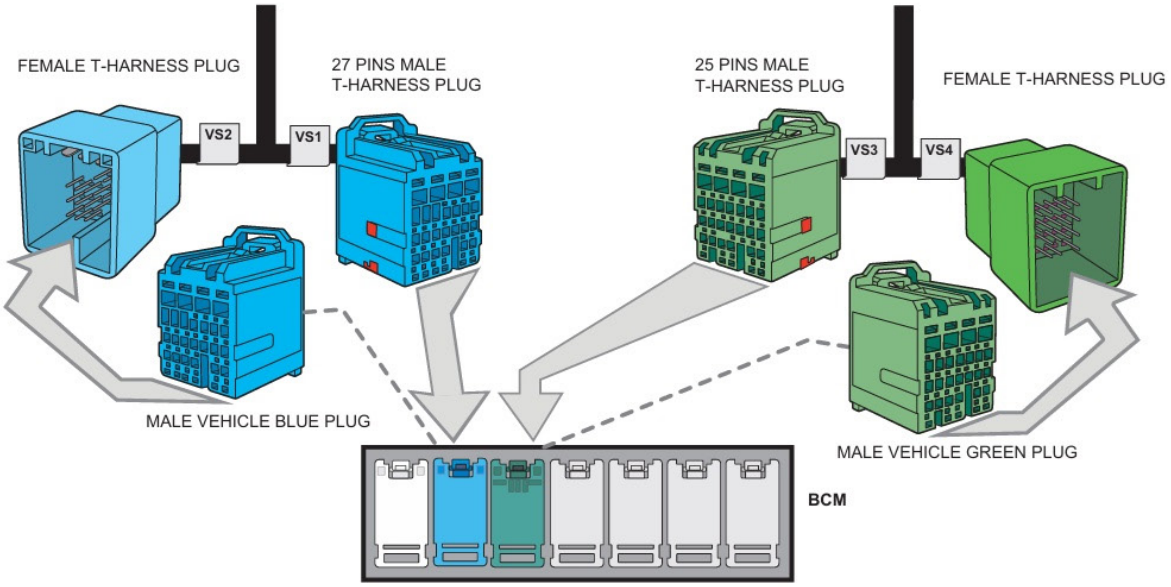

Accessing the BCM Connectors

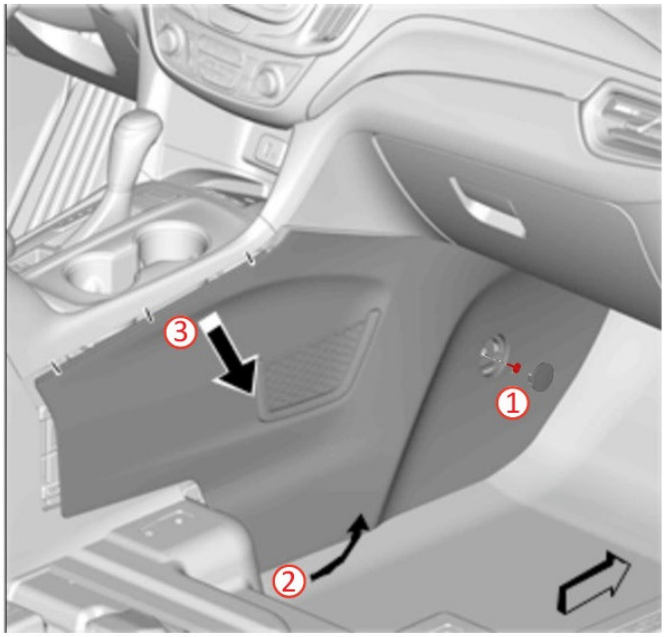

The BCM is located on the floor beneath the front of the center console, to access it you'll need to remove the passenger side console trim.

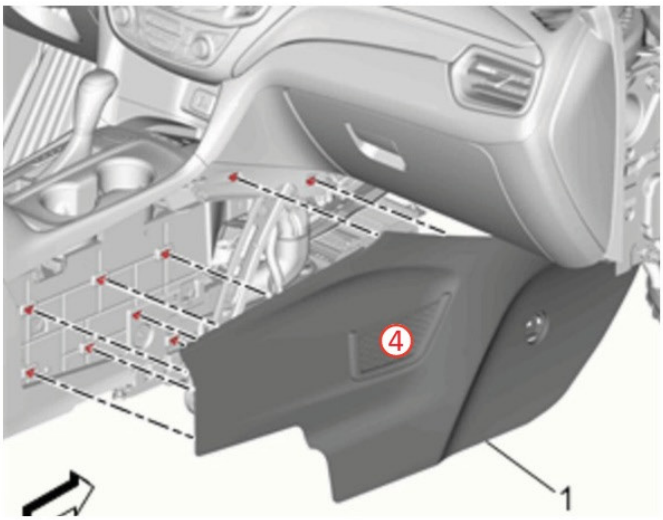

① Remove the bolt hole cover toward the front of the panel and remove the bolt underneath.

② With the aid of a panel removal tool, start at the bottom of the panel removing pop clips.

③ At the top of the panel, release in a downward angle to clear the console trim.

④ Finish releasing pop clips and remove the panel.

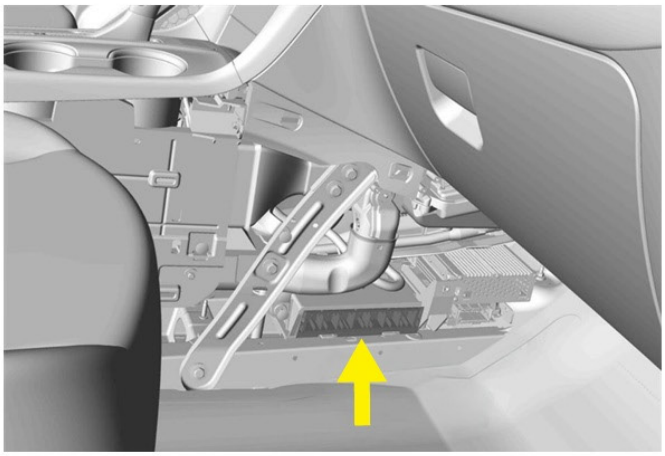

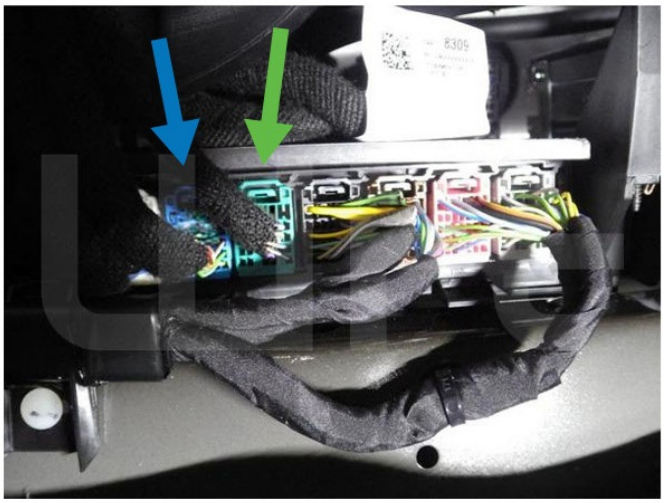

Use the VS1 and VS2 connectors to connect into the Blue connector (2nd from left) on the BCM.

Use the VS3 and VS4 connectors to connect into the Green connector (3rd from left on the BCM.

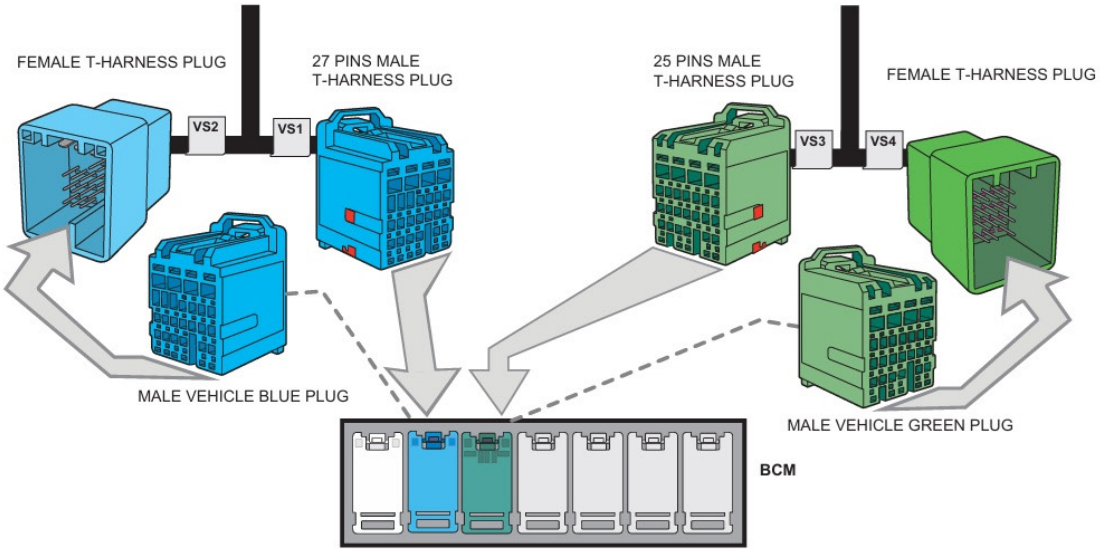

Accessing the BCM Connectors

The BCM is located behind the fuse box on the left side of the dash, depending on trim there will be a storage cubby or simple access panel that can be removed to get to the needed connectors.

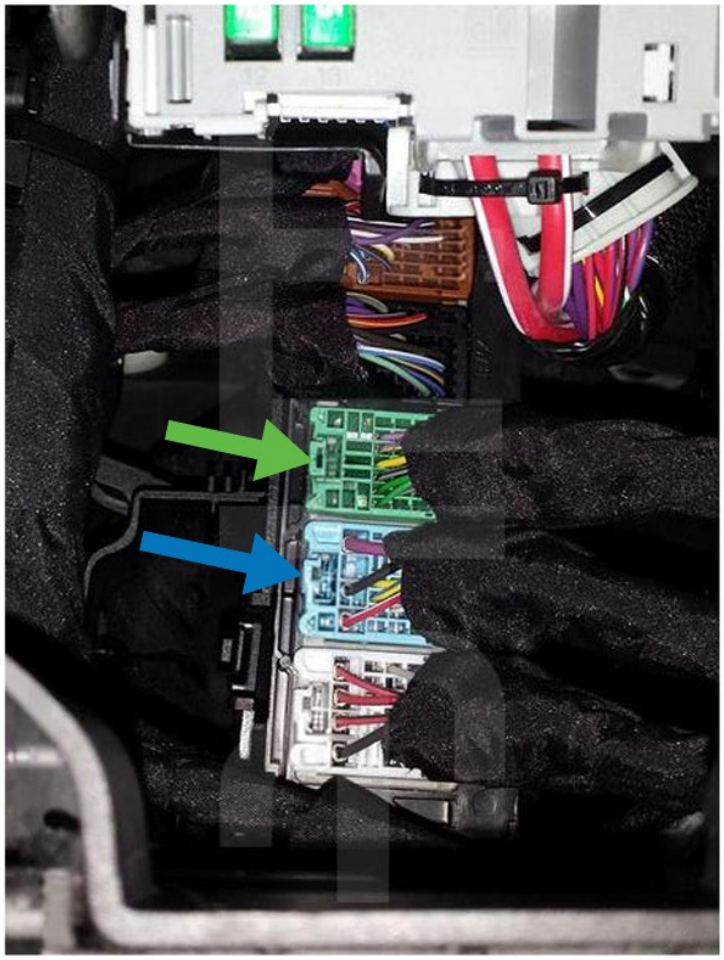

The storage cubby is removed by opening the cubby, pushing inward on the tabs so that is can be rotated further and then lifting it off the hinge points at the bottom.

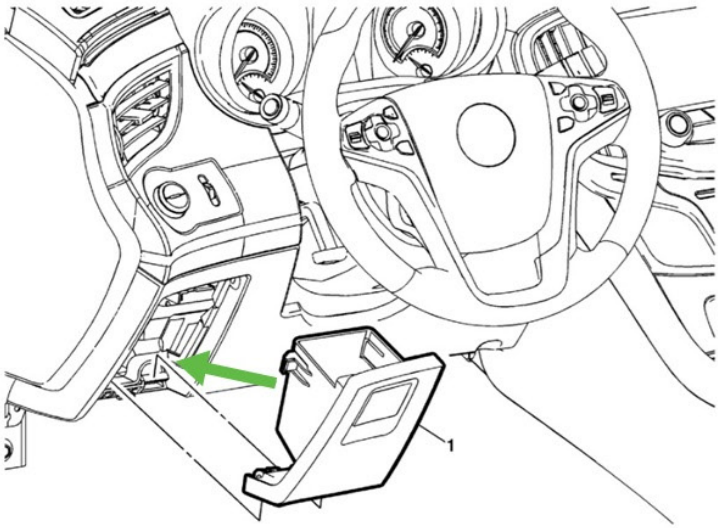

To remove the access panel, pop out the bottom of the panel with a panel removal tool and then lower the panel from the dash.

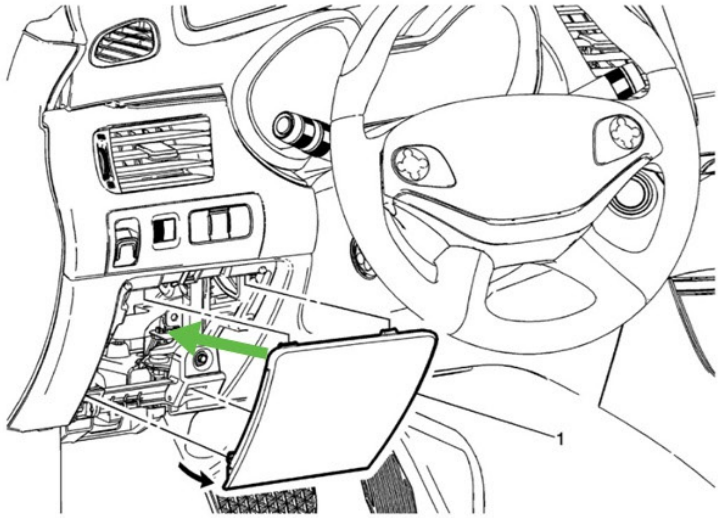

Use the VS1 and VS2 connectors to connect into the Blue connector (2nd from left) on the BCM.

Use the VS3 and VS4 connectors to connect into the Green connector (3rd from left on the BCM.

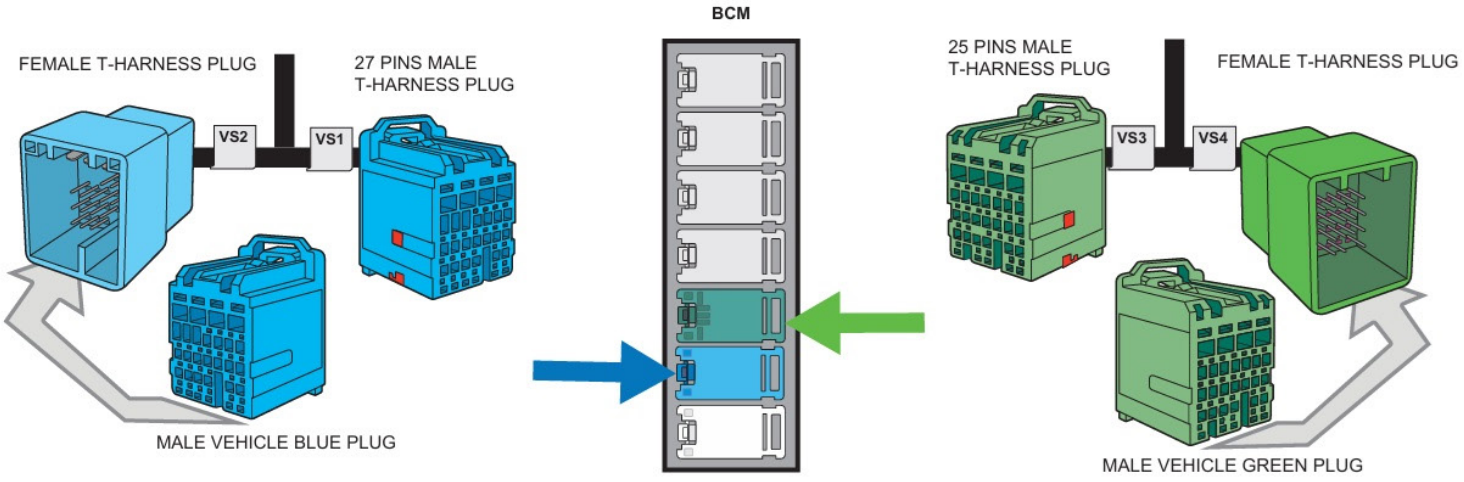

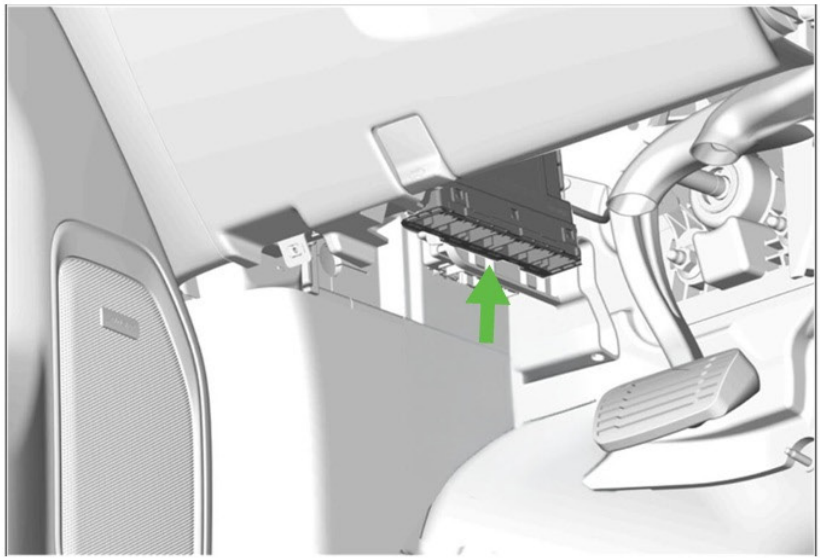

Accessing the BCM Connectors

The BCM is located above the drivers kick panel with connectors facing down. The connectors should be accessible without any vehicle disassembly.

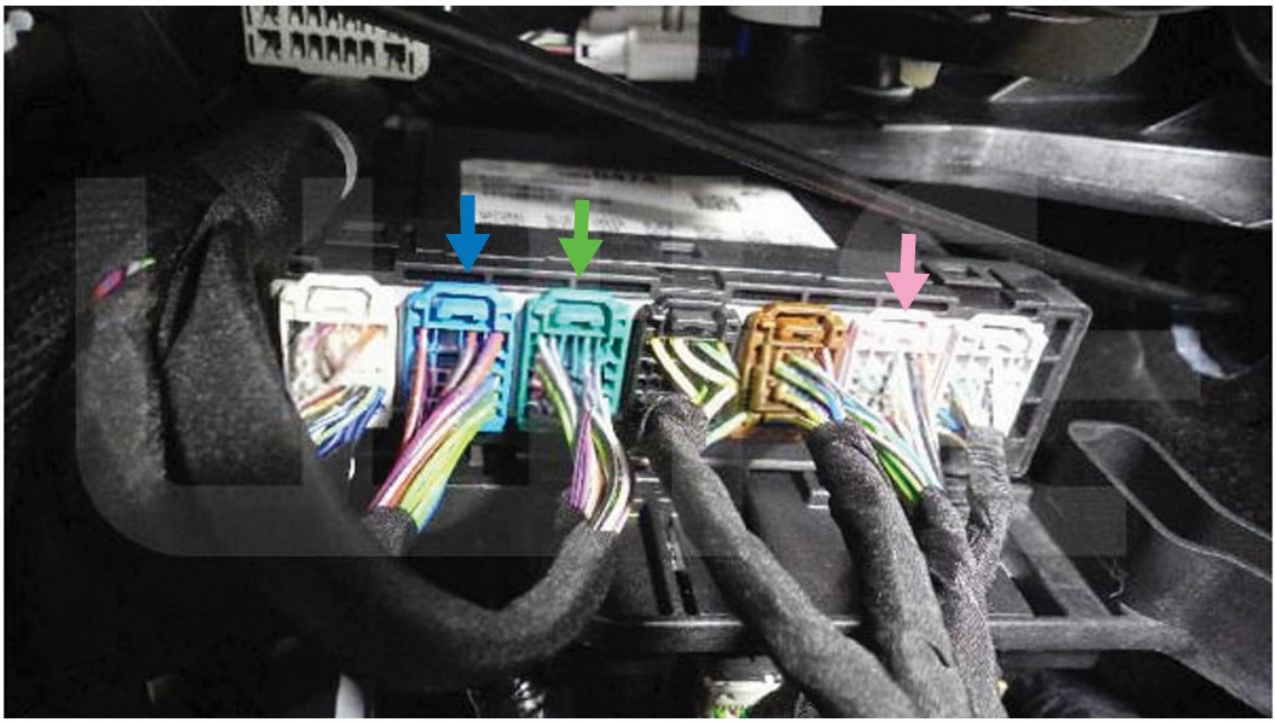

Use the VS1 and VS2 connectors to connect into the Blue connector (2nd from left) on the BCM.

Use the VS3 and VS4 connectors to connect into the Green connector (3rd from left) on the BCM.

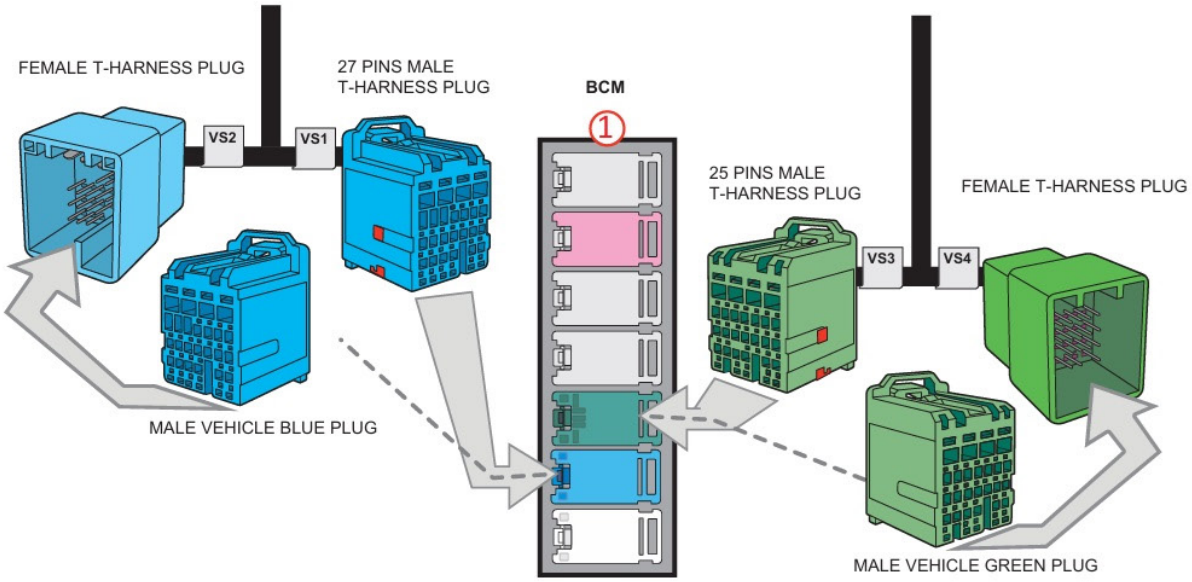

Accessing the BCM Connectors

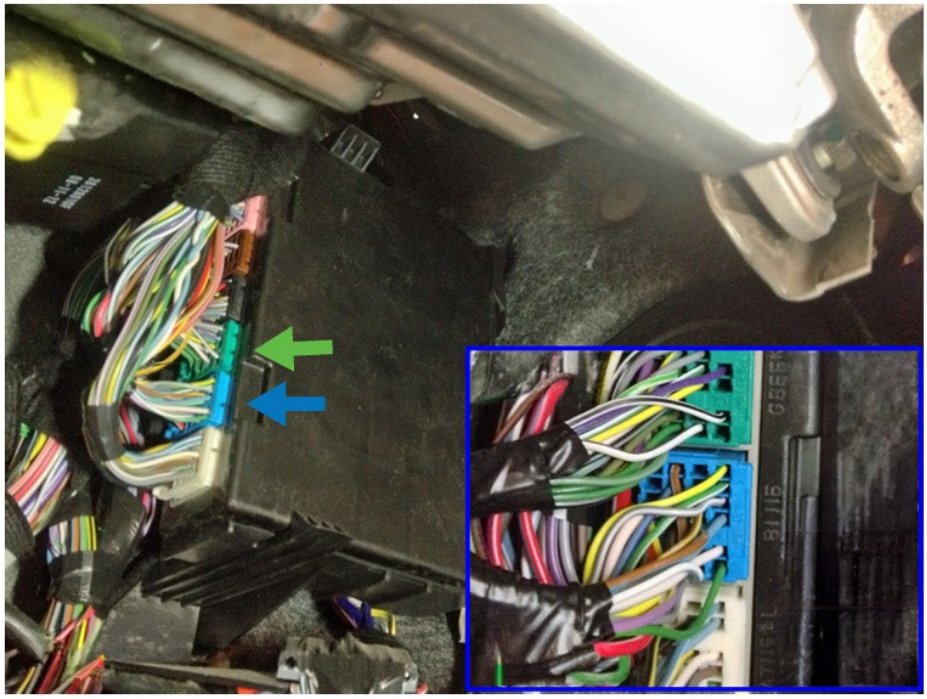

The BCM is located above the drivers kick panel behind the fuse box with connectors facing toward the rear of the vehicle. The necessary connectors are the 2nd and 3rd plugs from the bottom of the BCM and should be accessible from beneath the dash without any vehicle disassembly.



Use the VS1 and VS2 connectors to connect into the Blue connector (2nd from left) on the BCM.

Use the VS3 and VS4 connectors to connect into the Green connector (3rd from left) on the BCM.

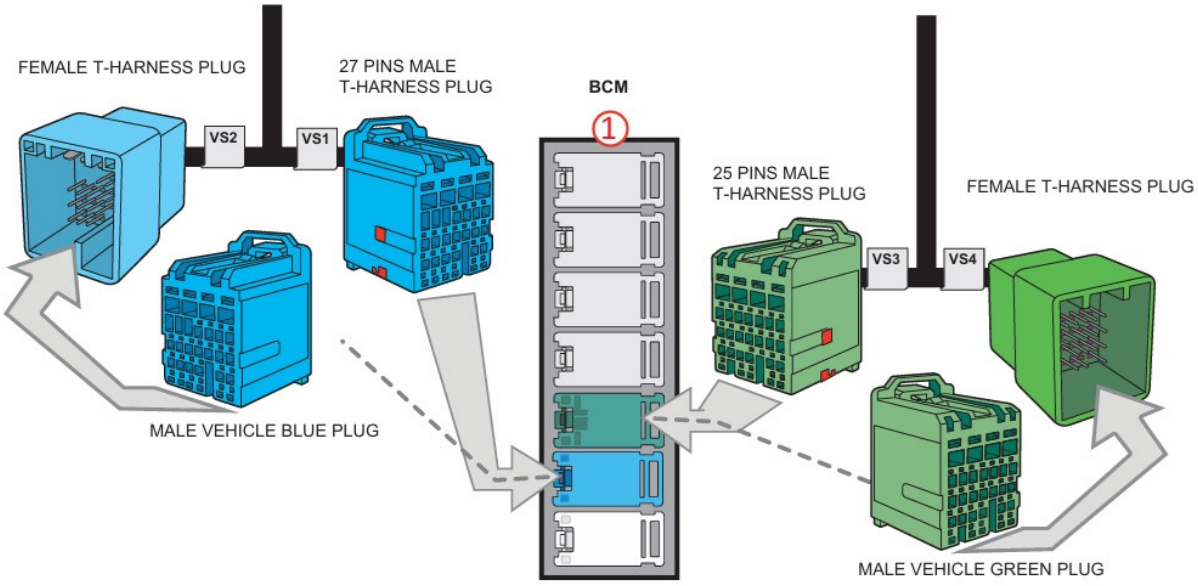

Accessing the BCM Connectors

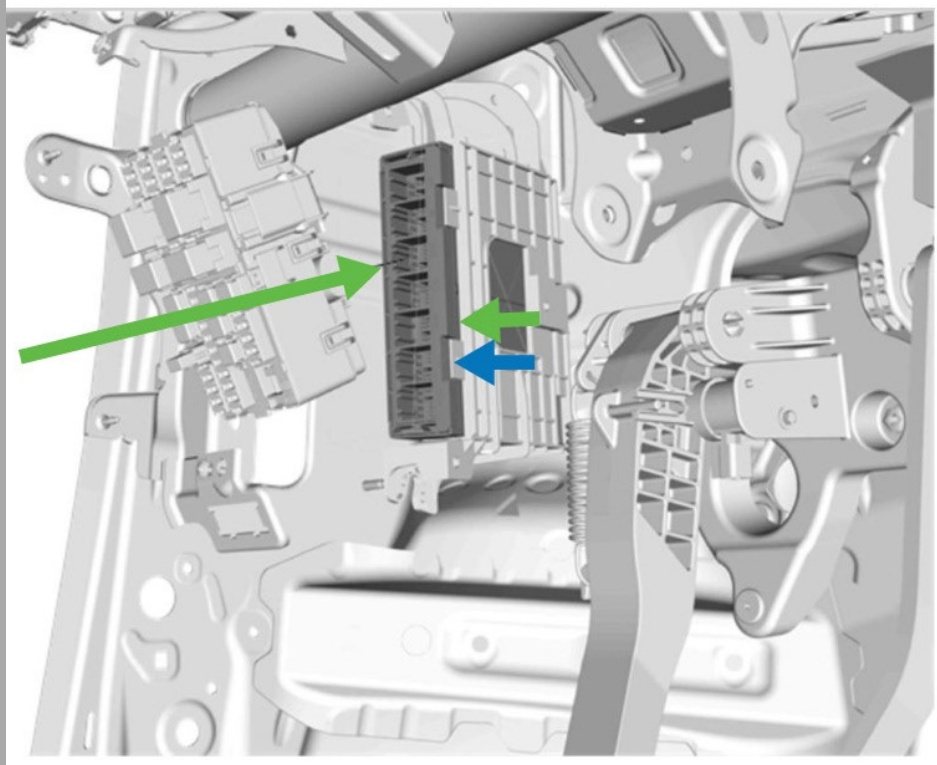

The BCM is located above the drivers kick panel behind the fuse box with connectors facing toward the rear of the vehicle. The necessary connectors are the 2nd and 3rd plugs from the bottom of the BCM and should be accessible from beneath the dash without any vehicle disassembly.

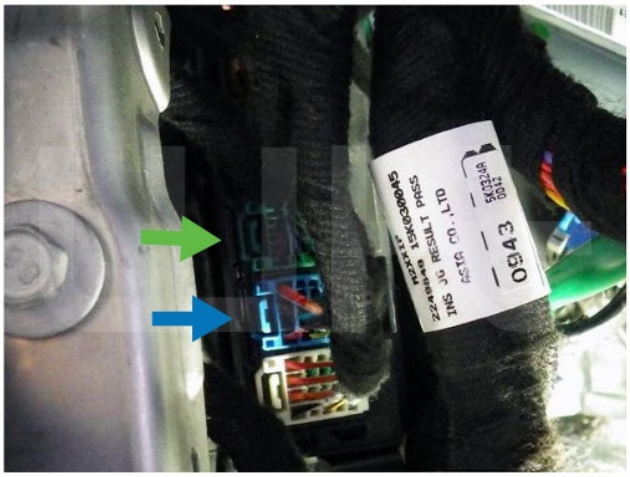

Use the VS1 and VS2 connectors to connect into the Blue connector (2nd from left) on the BCM.

Use the VS3 and VS4 connectors to connect into the Green connector (3rd from left) on the BCM.

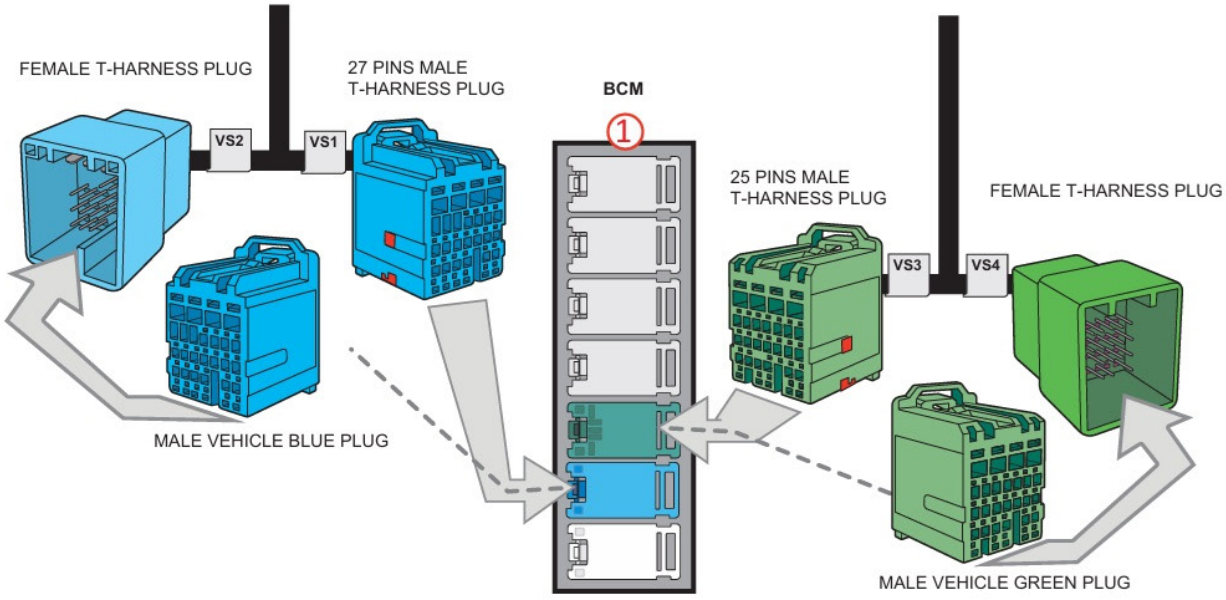

Accessing the BCM Connectors



The BCM is located behind the OBD2 port with connectors facing downward, you should be able to access the necessary connections without any vehicle disassembly.



Use the VS3 and VS4 connectors to connect into the Green connector (3rd from left on the BCM.

Use the VS1 and VS2 connectors to connect into the Blue connector (2nd from left) on the BCM.

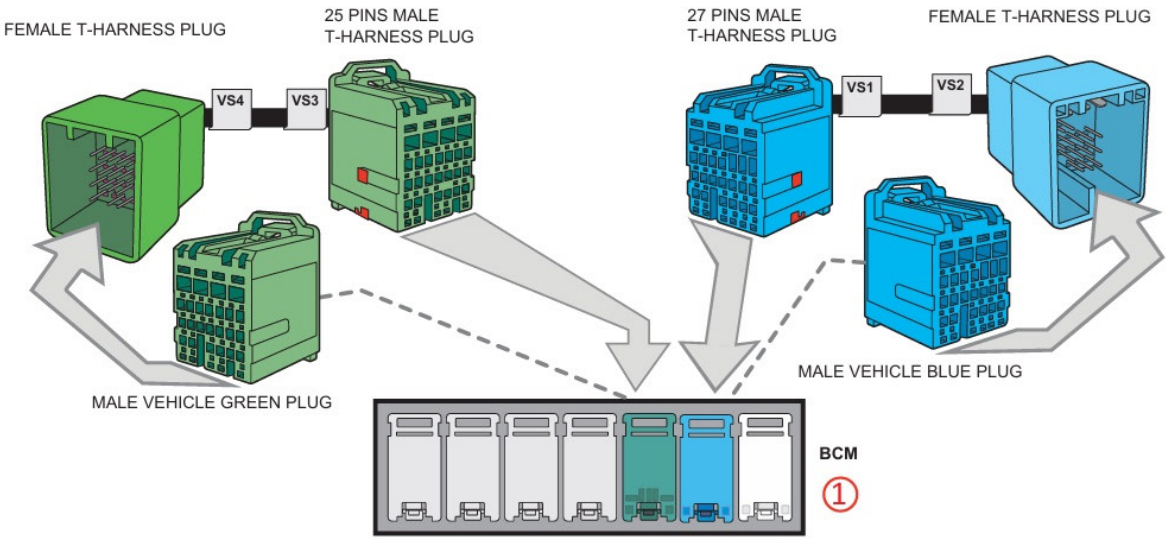

Accessing the BCM Connectors

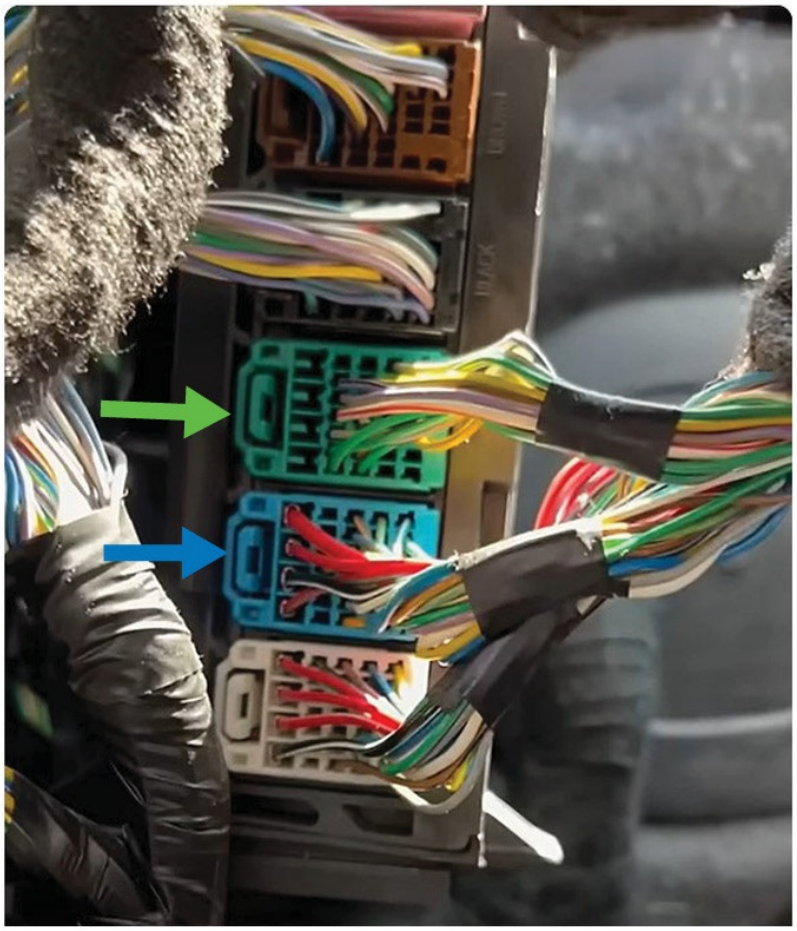

The BCM is located above the drivers kick panel behind the fuse box with connectors facing toward the rear of the vehicle. The necessary connectors are the 2nd and 3rd plugs from the bottom of the BCM and can be accessed either by reaching up from underneath the dash or by removing the fuse panel access cubby.

To remove the cubby, squeeze in on the sides to open it further and then lift off the hinge points at the bottom.

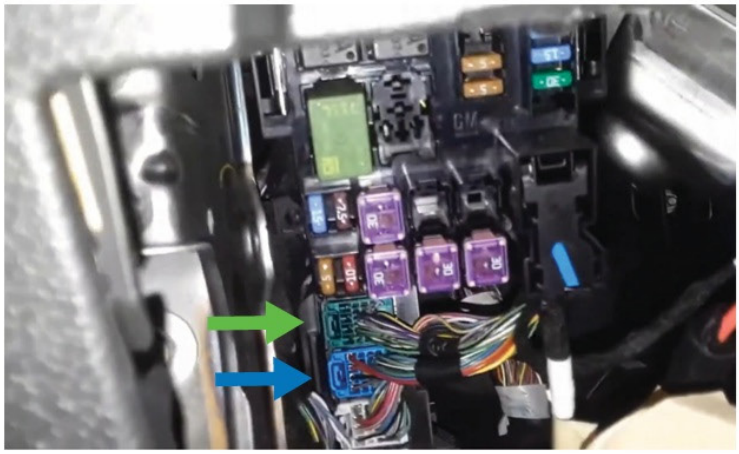

Use the VS1 and VS2 connectors to connect into the Blue connector (2nd from left) on the BCM.

Use the VS3 and VS4 connectors to connect into the Green connector (3rd from left) on the BCM.

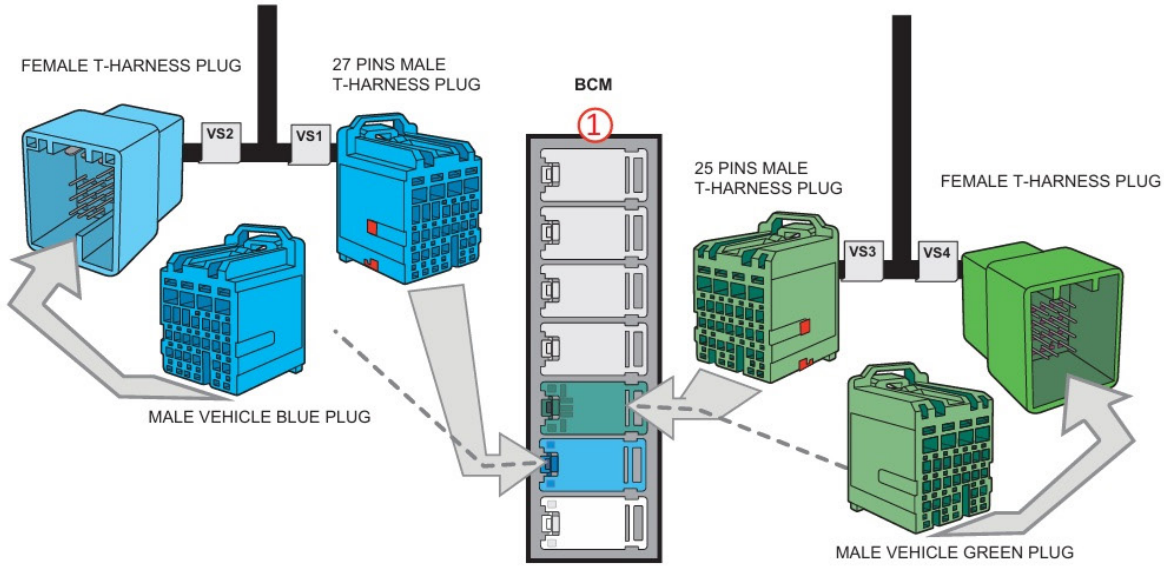

Accessing the BCM Connectors

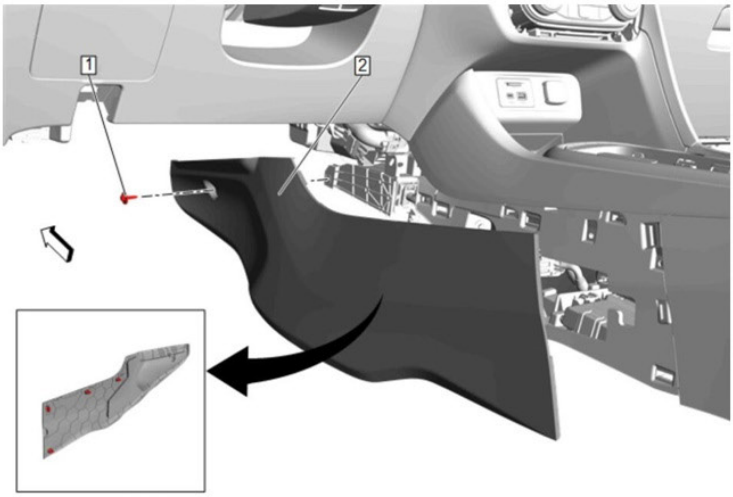

The BCM is located on the floor beneath the front of the center console, to access it you'll need to remove the drivers side console trim.

Remove a single screw toward the front of the panel and then with the aid of a panel removal tool pop the panel clips free and move the panel aside.

Remove the floor vent extension by flexing it and removing one end and then the other.



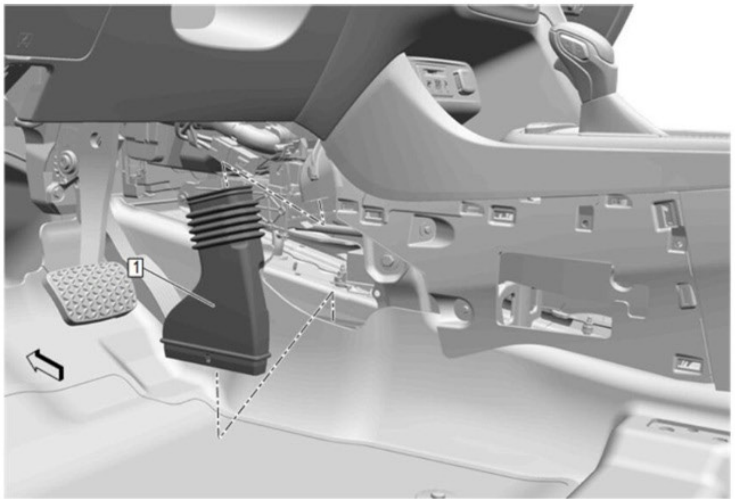

The BCM connectors face the rear of the vehicle, the necessary connectors are the 2nd and 3rd ones in from the drivers side.

Use the VS1 and VS2 connectors to connect into the Blue connector (2nd from left) on the BCM.

Use the VS3 and VS4 connectors to connect into the Green connector (3rd from left on the BCM.

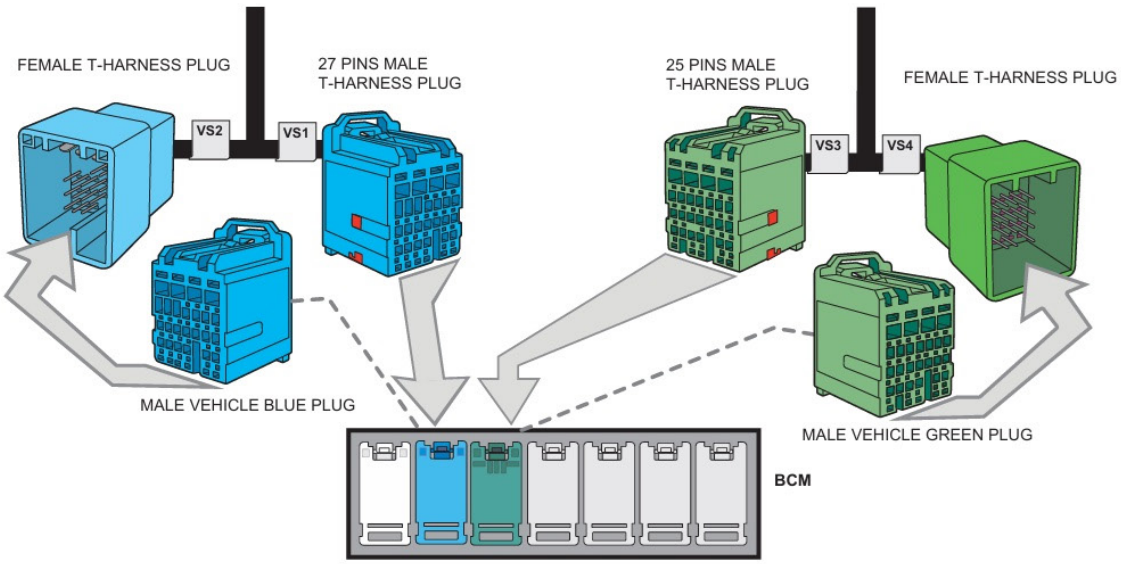

Accessing the BCM Connectors

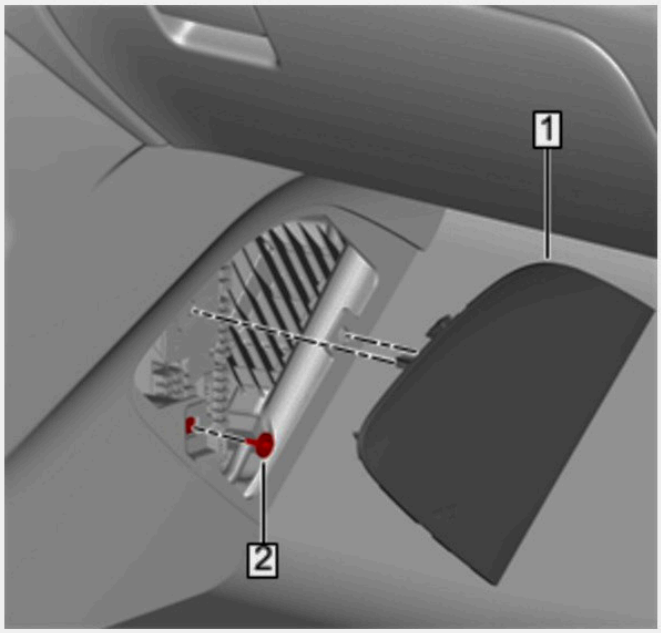

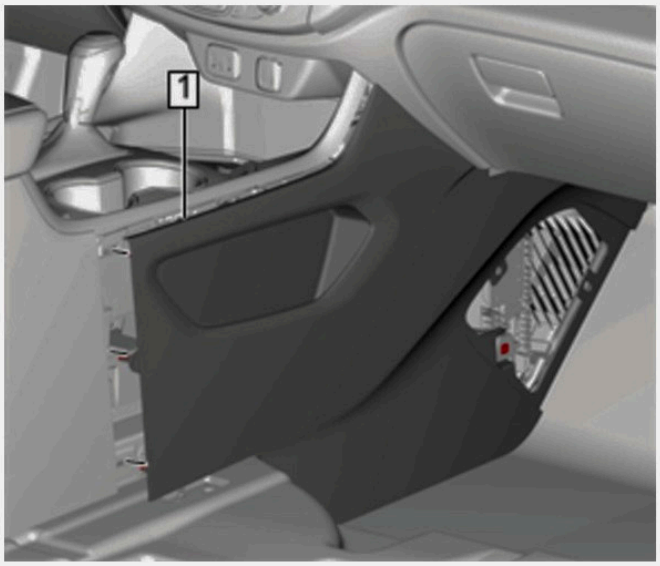

The BCM is located on the floor beneath the front of the center console, to access it you'll need to remove the passenger side console trim.

Begin by removing the fuse box access panel and then remove one bolt at the rear of the opening.

With the aid of a panel removal tool, begin working from the rear of the panel popping the clips loose. As you reach the front of the panel, move the entire panel toward the rear of the vehicle to clear the dash trim.

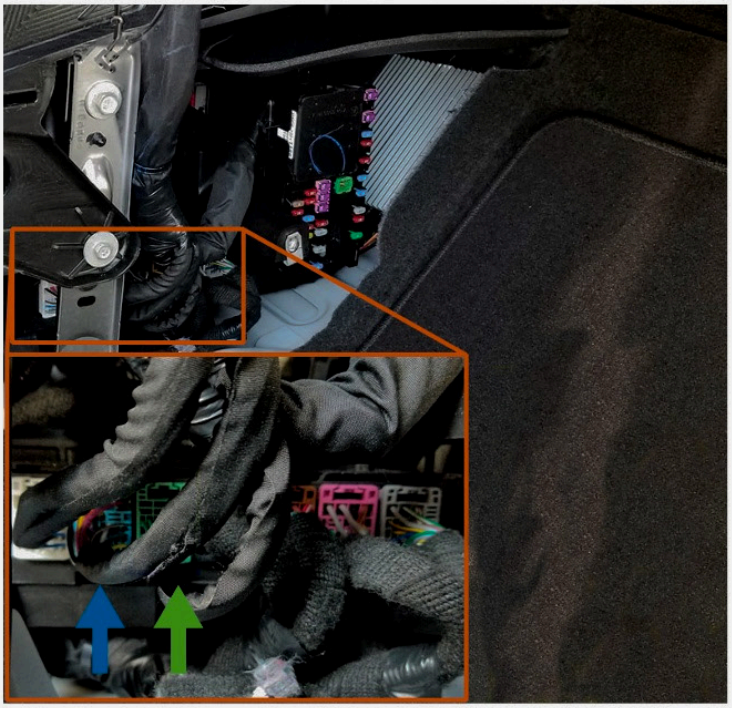

Use the VS1 and VS2 connectors to connect into the Blue connector (2nd from left) on the BCM.

Use the VS3 and VS4 connectors to connect into the Green connector (3rd from left on the BCM.

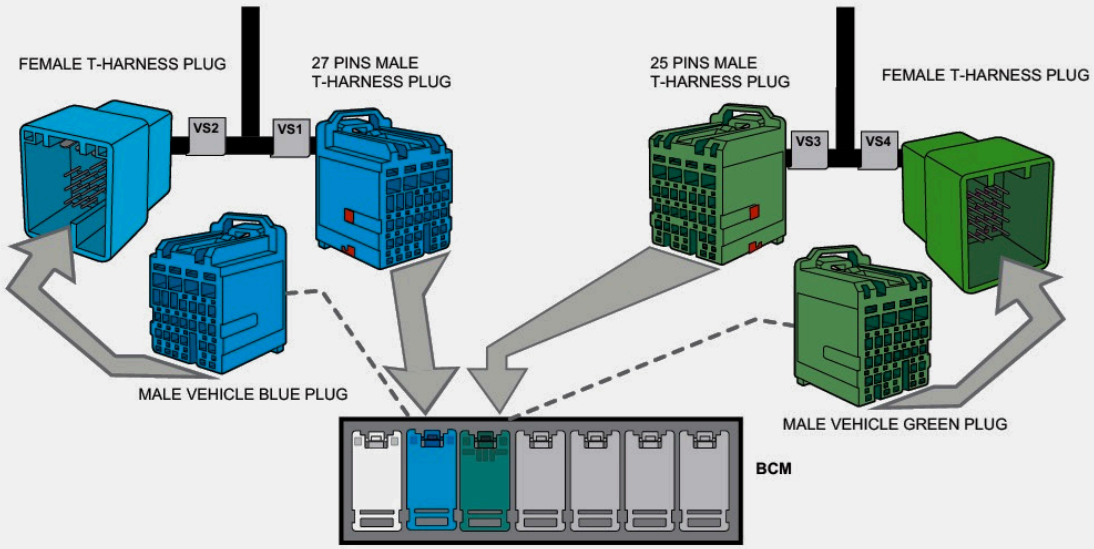

Accessing the BCM Connectors

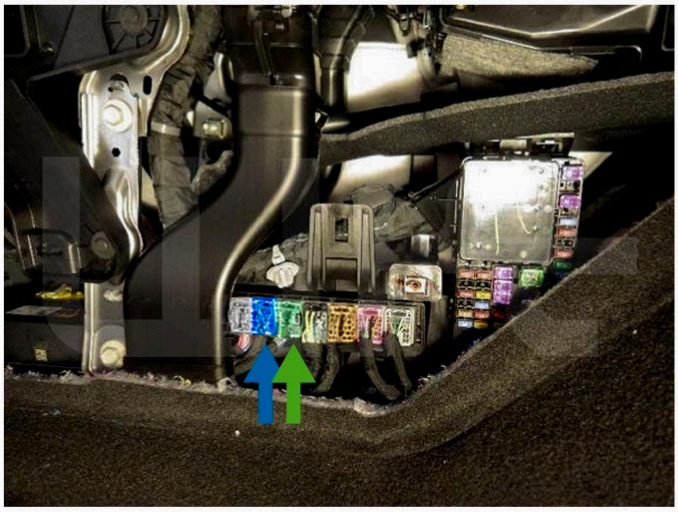

The BCM is located on the floor beneath the front of the center console, to access it you'll need to remove the passenger side console trim.

Remove the bolt cover and bolt from the forward area of the panel.

With the aid of a panel removal tool, begin working to pop the clips of the panel free from the console. Once the panel is free, move it aside to access the BCM.

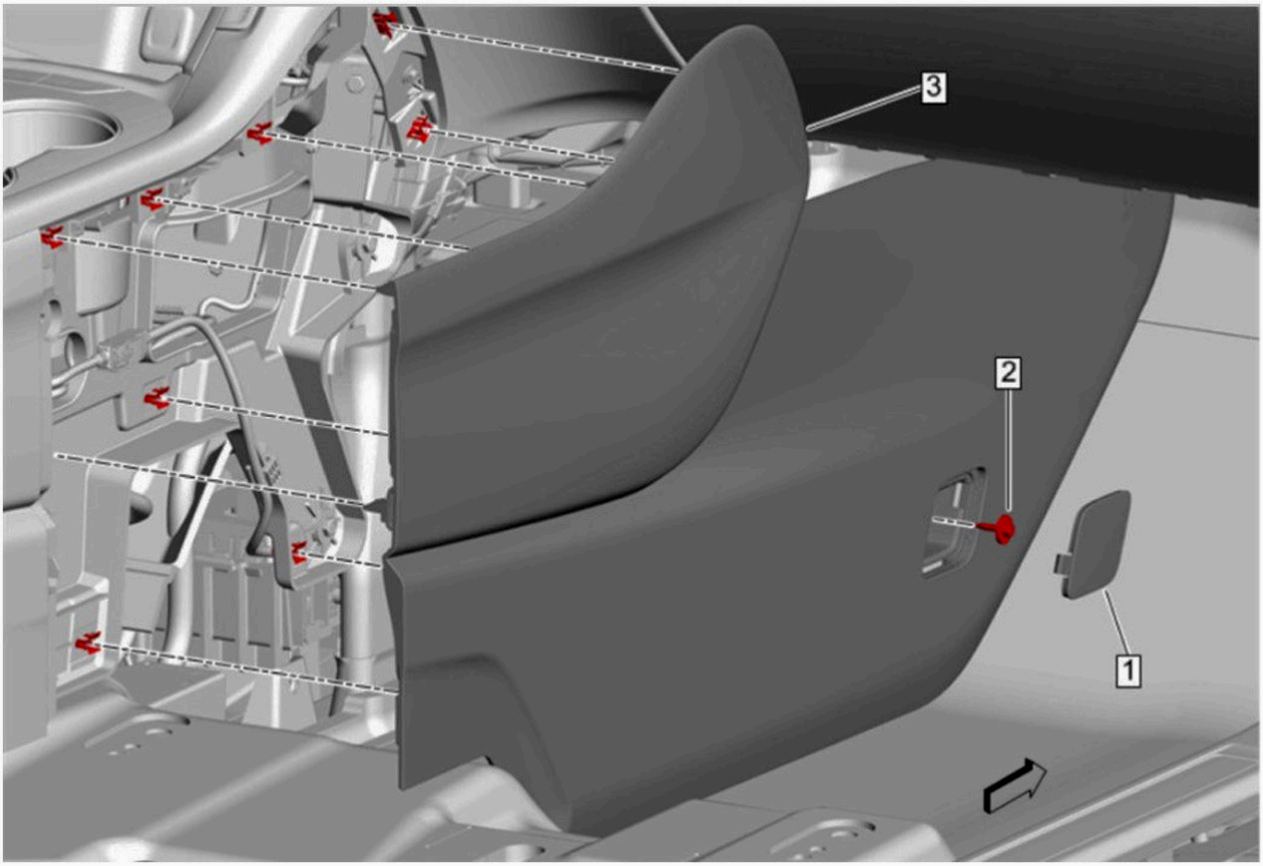

Use the VS1 and VS2 connectors to connect into the Blue connector (2nd from left) on the BCM.

Use the VS3 and VS4 connectors to connect into the Green connector (3rd from left) on the BCM.

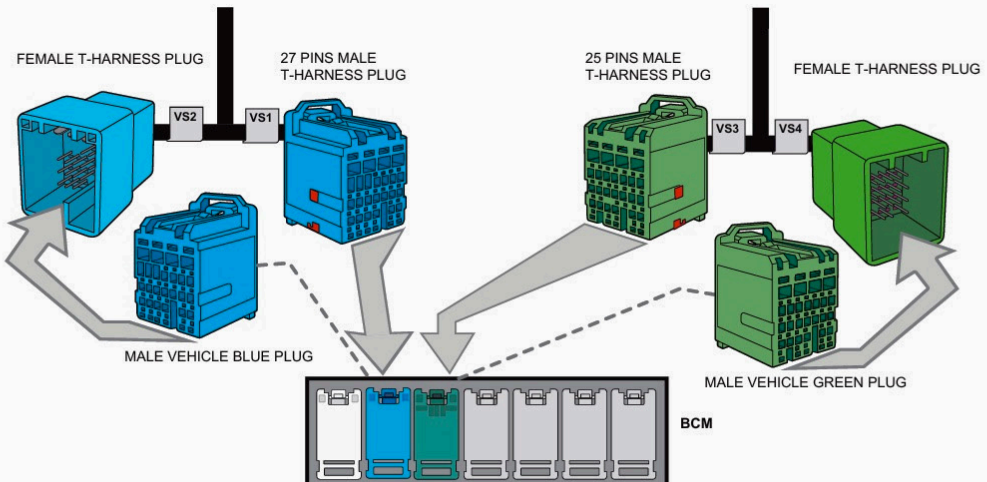

Accessing the BCM Connectors

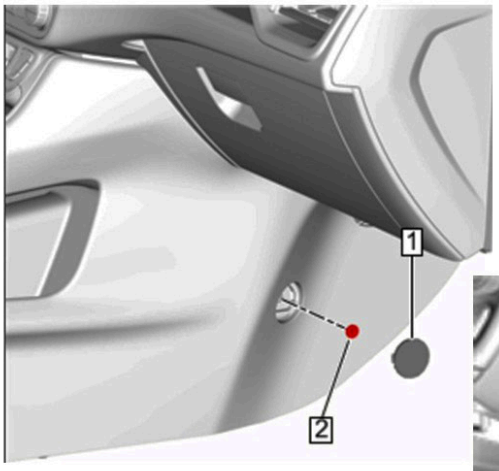

The BCM is located on the floor beneath the front of the center console, to access it you'll need to remove the passenger side console trim.

Remove the screw hole cover and screw from the front of the panel.

Open the center console armrest. With the aid of a panel removal tool, work your way from the back to the front popping the panel clips loose from the console. Note the clip locations on the picture to the right.

Once you get to the front edge of the panel, move the entire panel toward the rear of the vehicle to clear the dash trim at the front.

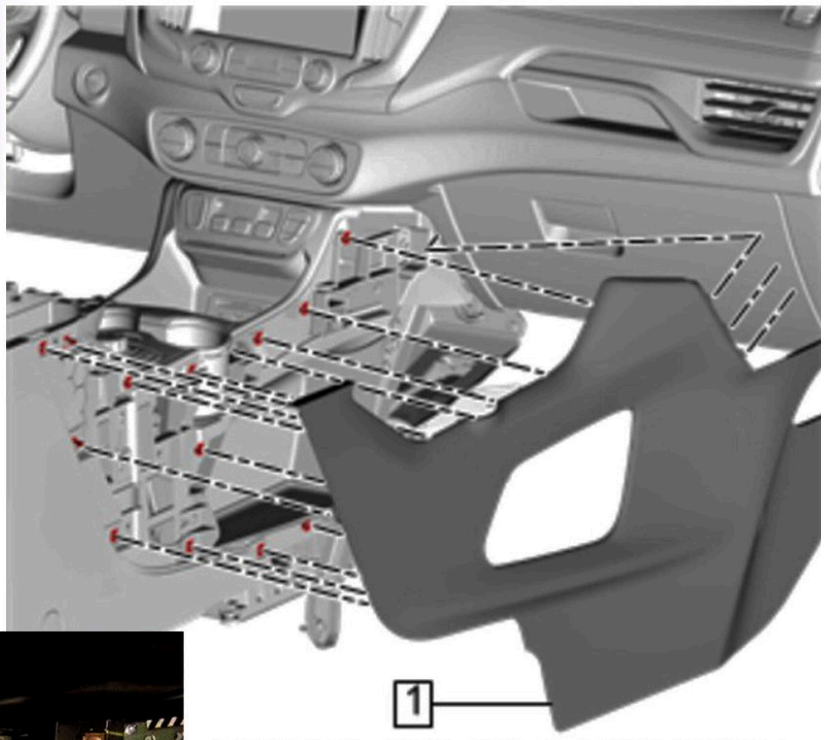

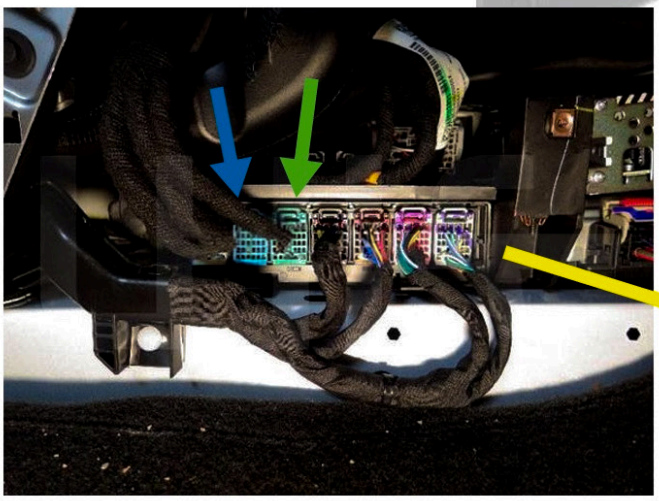

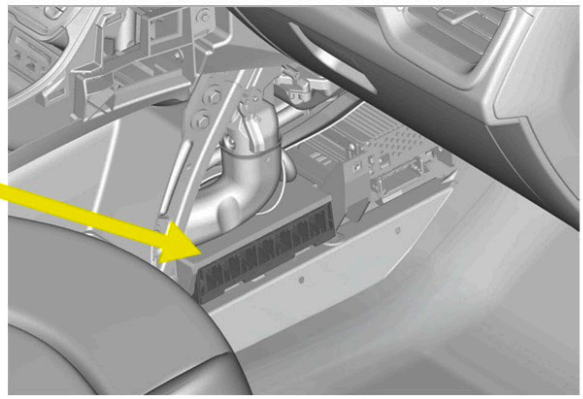

Use the VS1 and VS2 connectors to connect into the Blue connector (2nd from left) on the BCM.

Use the VS3 and VS4 connectors to connect into the Green connector (3rd from left on the BCM.

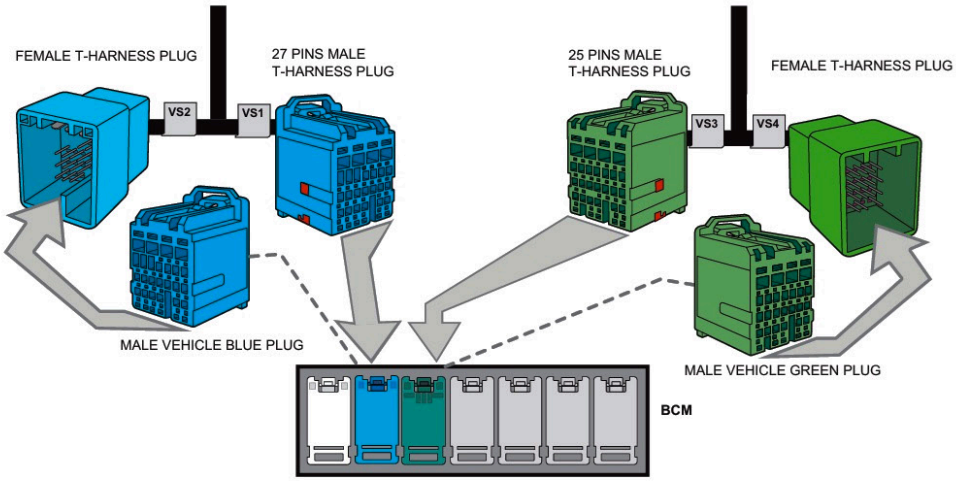

Accessing the BCM Connectors

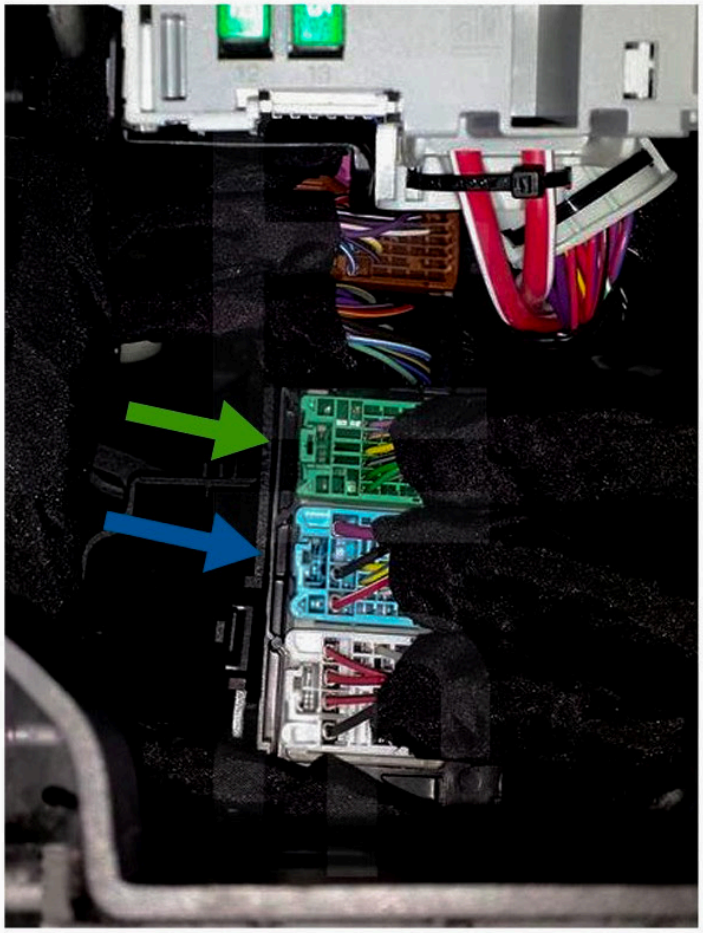

The BCM is located behind the fuse box on the left side of the dash, the needed connectors are accessible by removing the storage cubby on the left side of the dash. Open the cubby, push inward on the tabs so that is can be rotated further and then lift it off the hinge points at the bottom.

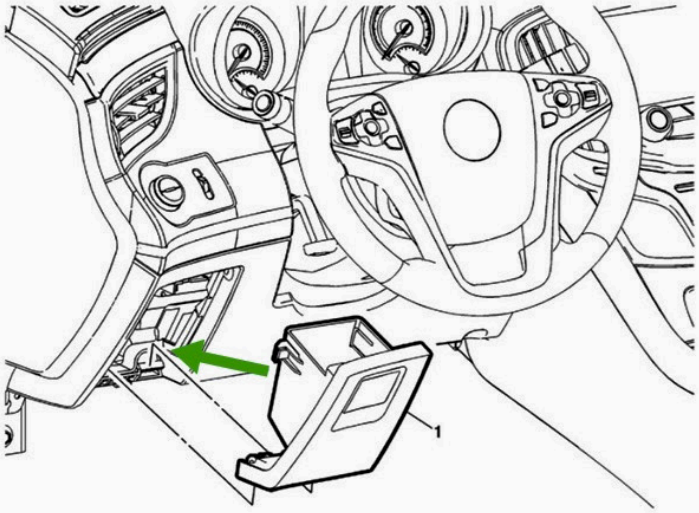

Use the VS1 and VS2 connectors to connect into the Blue connector (2nd from left) on the BCM.

Use the VS3 and VS4 connectors to connect into the Green connector (3rd from left on the BCM.

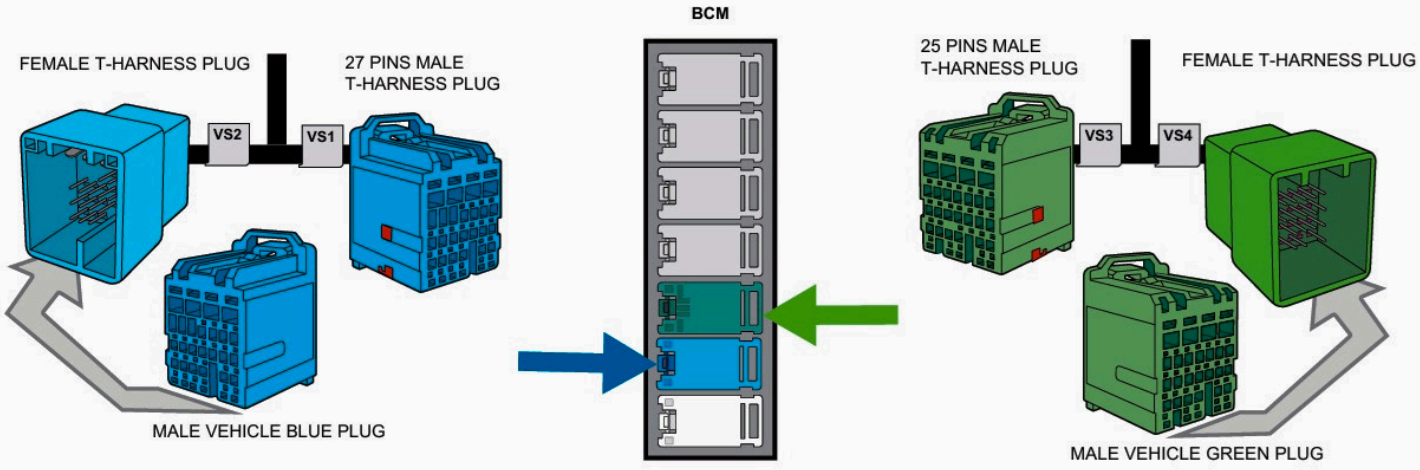

Accessing the BCM Connectors

The BCM is located on the floor beneath the front of the center console, to access it you'll need to remove the passenger side console trim.

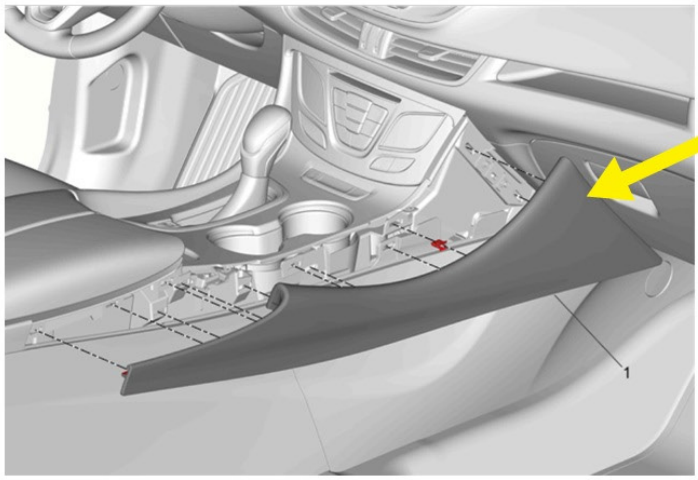

Step 1: Remove the trim on the top passenger side of the console with the aid of a panel removal tool.

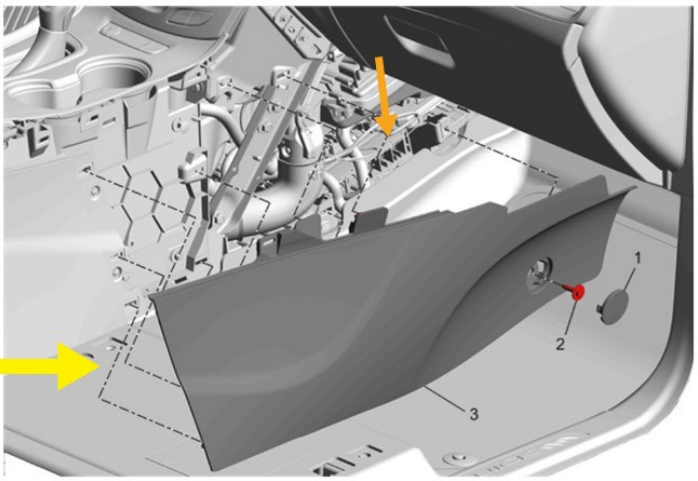

Step 2: Remove the bolt hole cover and bolt toward the front of the panel, then with the aid of a panel removal tool work your way around the panel to release the pop clips and remove the panel.

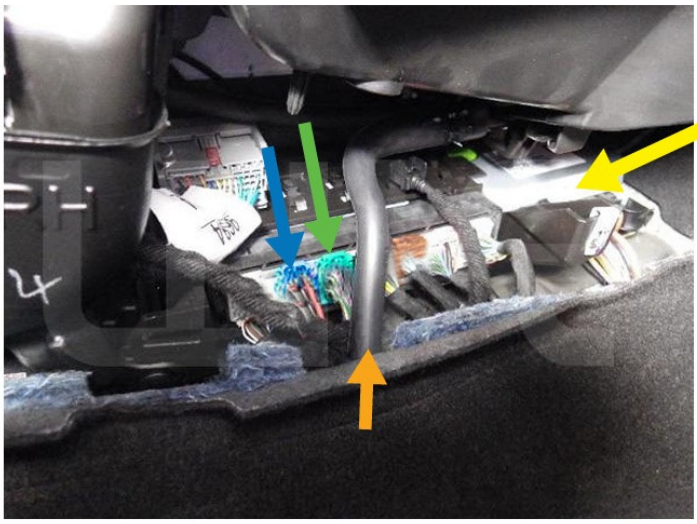

Step 3: The AC condensate drain hose runs in front of the BCM, it is somewhat flexible and you should be able to shift it enough to get to the connectors without removing it. Take care not to accidentally disconnect it from the evaporator box or lower drain hose just beneath the carpet.

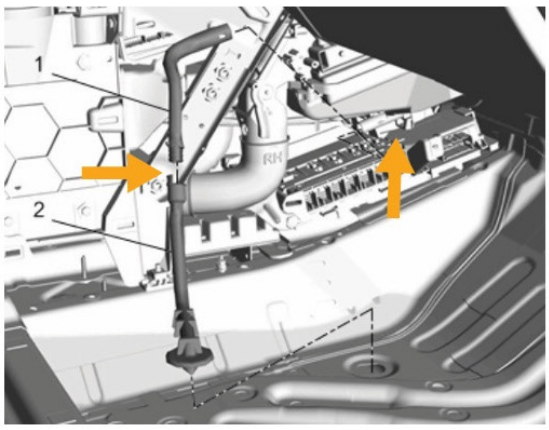

Use the VS1 and VS2 connectors to connect into the Blue connector (2nd from left) on the BCM.

Use the VS3 and VS4 connectors to connect into the Green connector (3rd from left on the BCM.

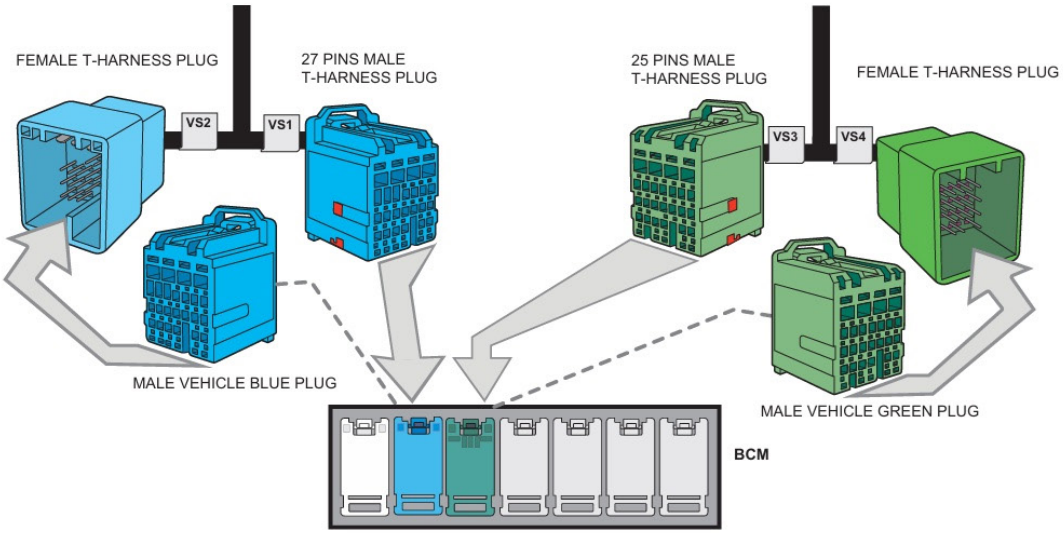

Accessing the BCM Connectors

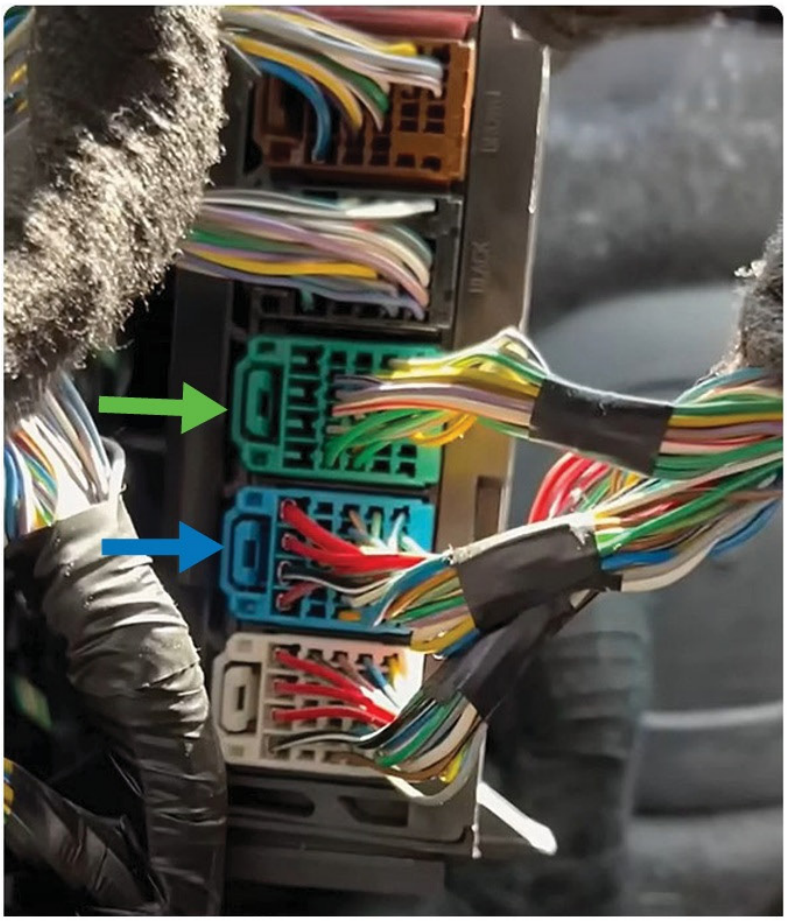

The BCM is located above the drivers kick panel behind the fuse box with connectors facing toward the rear of the vehicle. The necessary connectors are the 2nd and 3rd plugs from the bottom of the BCM and can be accessed either by reaching up from underneath the dash or by removing the fuse panel access cubby.

To remove the cubby, squeeze in on the sides to open it further and then lift off the hinge points at the bottom.



Use the VS1 and VS2 connectors to connect into the Blue connector (2nd from left) on the BCM.

Use the VS3 and VS4 connectors to connect into the Green connector (3rd from left) on the BCM.

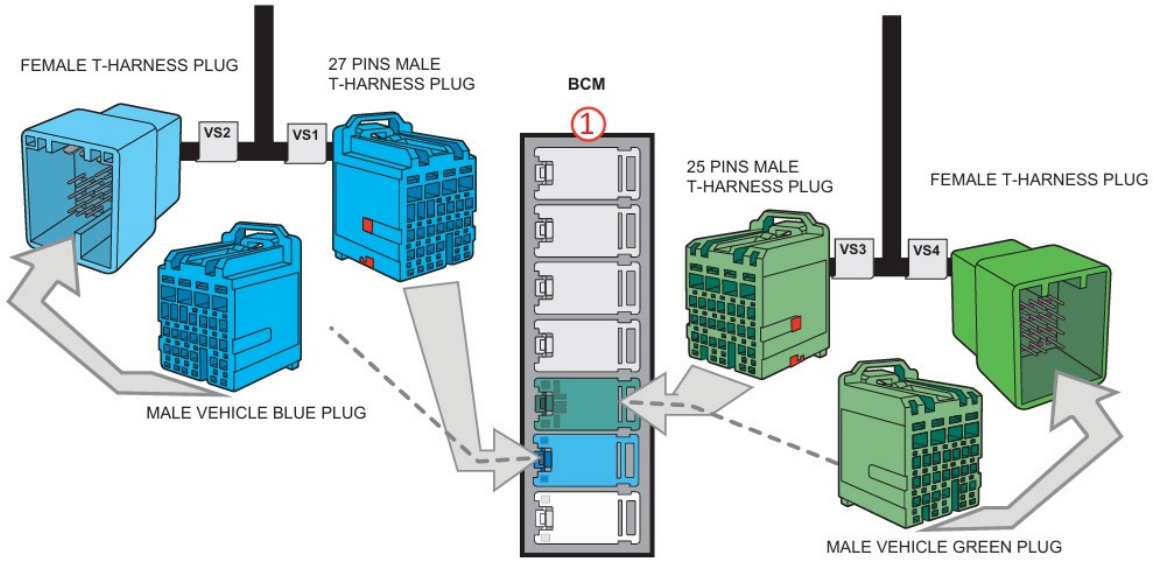

Accessing the BCM Connectors

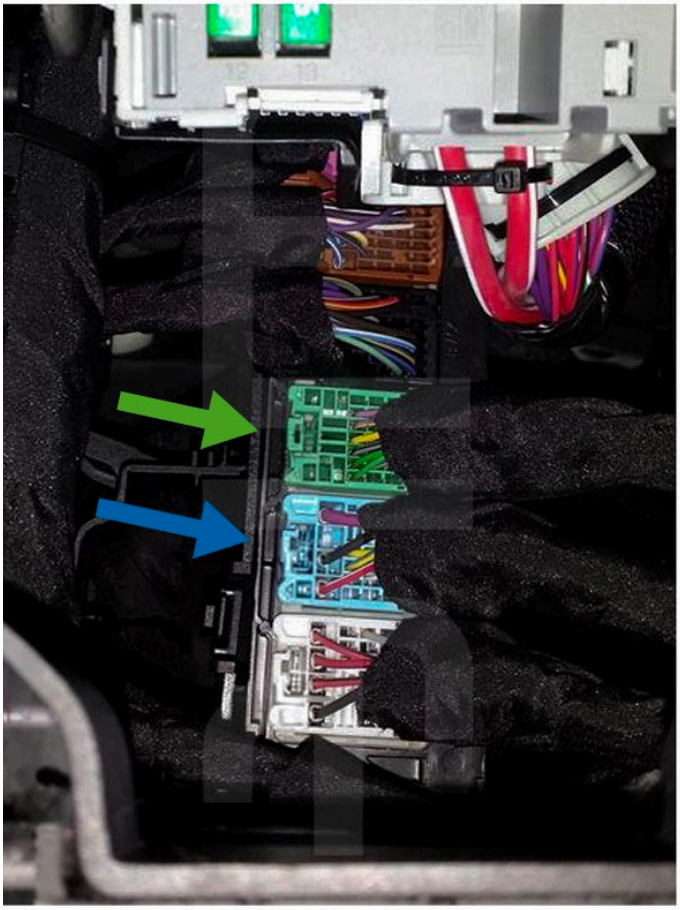

The BCM is located behind the fuse box on the left side of the dash, the needed connectors are accessible by removing the storage cubby on the left side of the dash. Open the cubby, push inward on the tabs so that is can be rotated further and then lift it off the hinge points at the bottom.

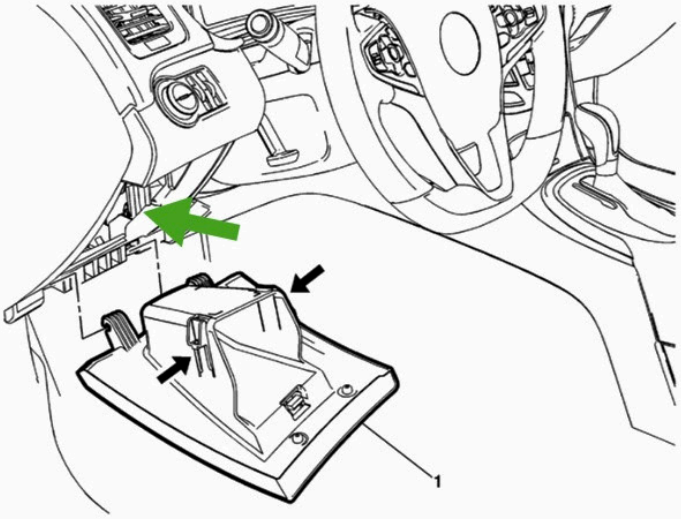

Use the VS1 and VS2 connectors to connect into the Blue connector (2nd from left) on the BCM.

Use the VS3 and VS4 connectors to connect into the Green connector (3rd from left on the BCM.

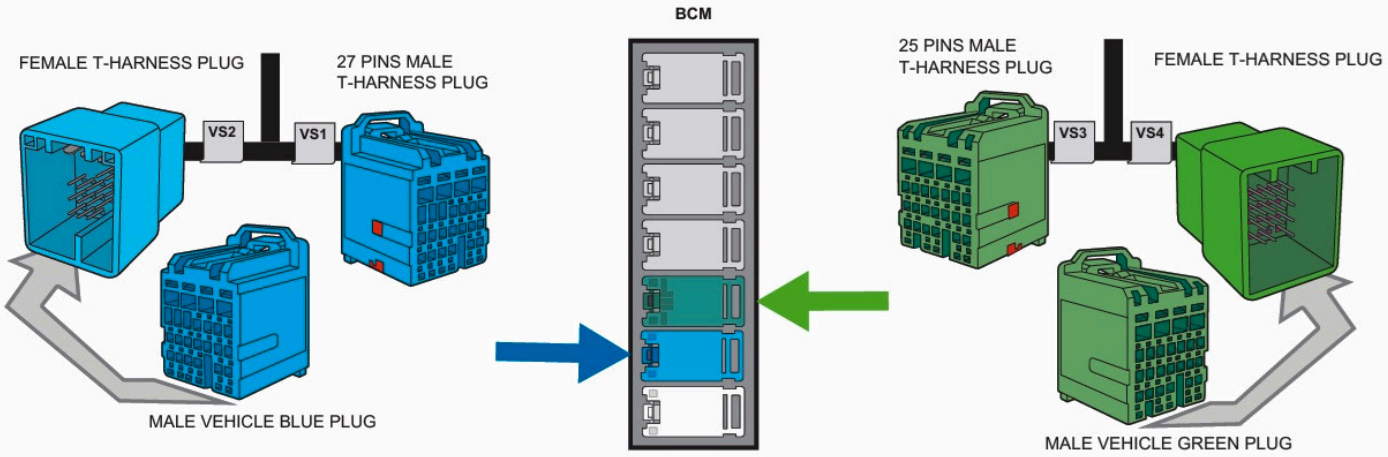

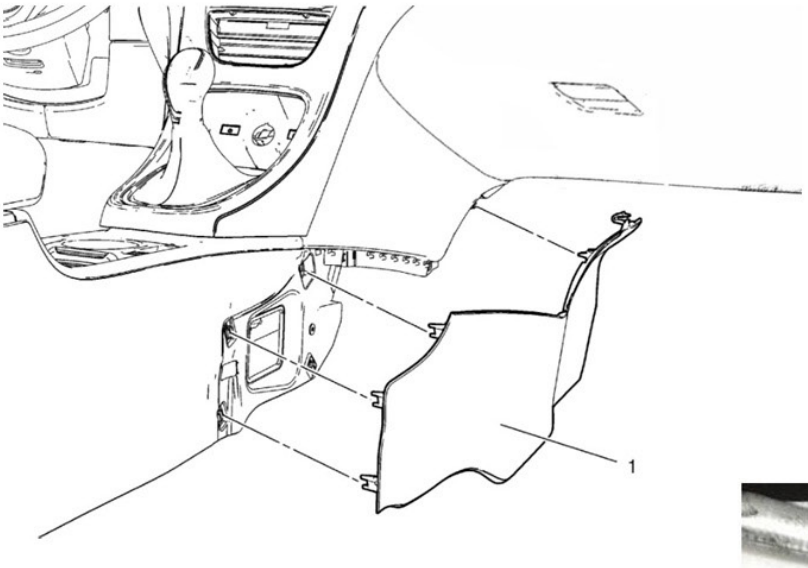

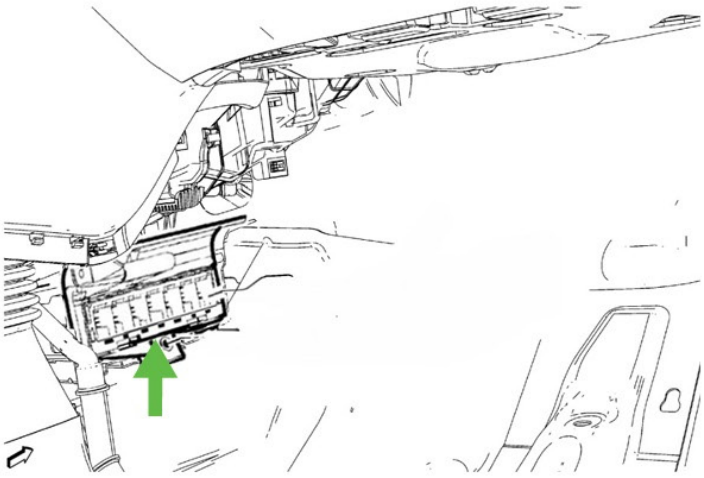

Accessing the BCM Connectors

The BCM is located beneath the front of the center console. To access it remove the passenger side center console trim panel by popping the four (4x) clips loose with the aid of a panel removal tool

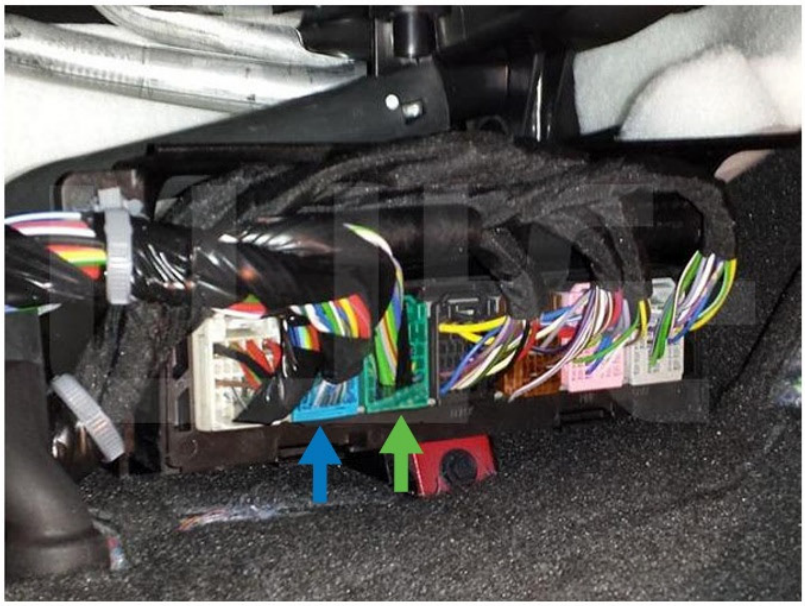

Use the VS1 and VS2 connectors to connect into the Blue connector (2nd from left) on the BCM.

Use the VS3 and VS4 connectors to connect into the Green connector (3rd from left) on the BCM.

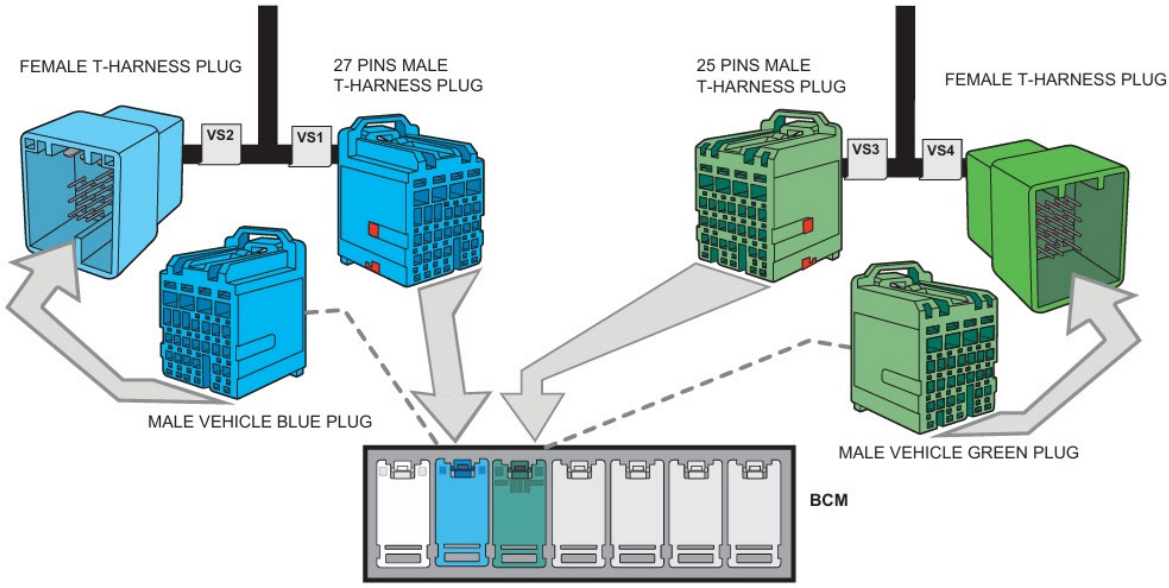

Accessing the BCM Connectors

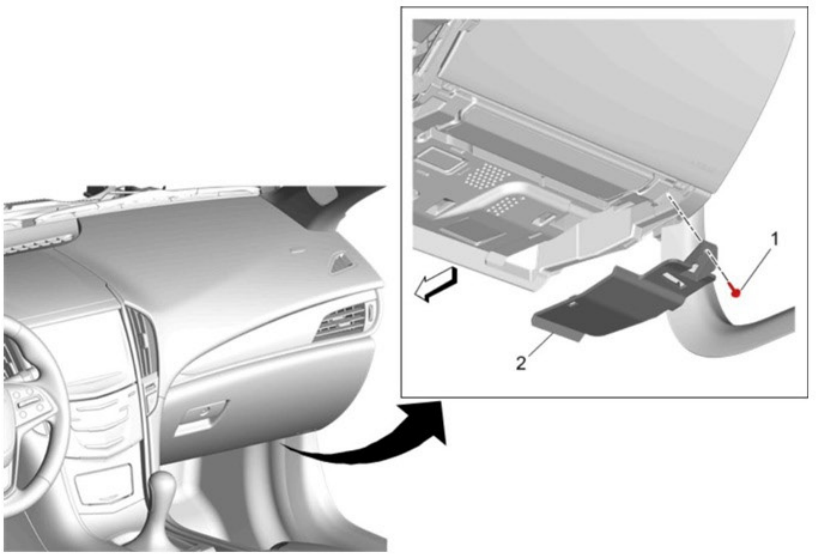

The BCM is behind the right side of the glove compartment on the passenger side of the vehicle, the connectors face down and can be accessed from beneath by removing the insulator panel below the dash.

Remove a single screw from the insulator hole cover and then remove the cover.

Remove three (3x) screws from the insulator panel, one in the near left corner, one in the insulator panel hole and one in the rear of the panel. Lower the insulator panel and position it out of the way.

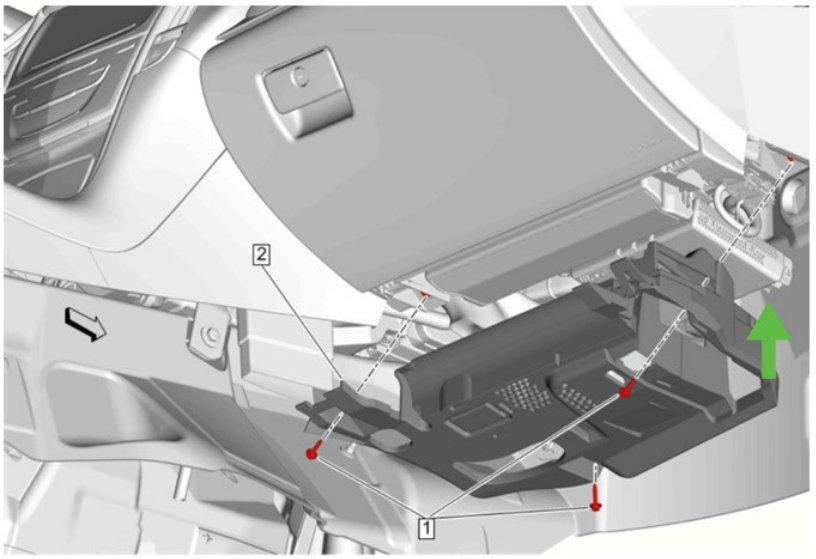



Use the VS1 and VS2 connectors to connect into the Blue connector (2nd from left) on the BCM.

Use the VS3 and VS4 connectors to connect into the Green connector (3rd from left) on the BCM.

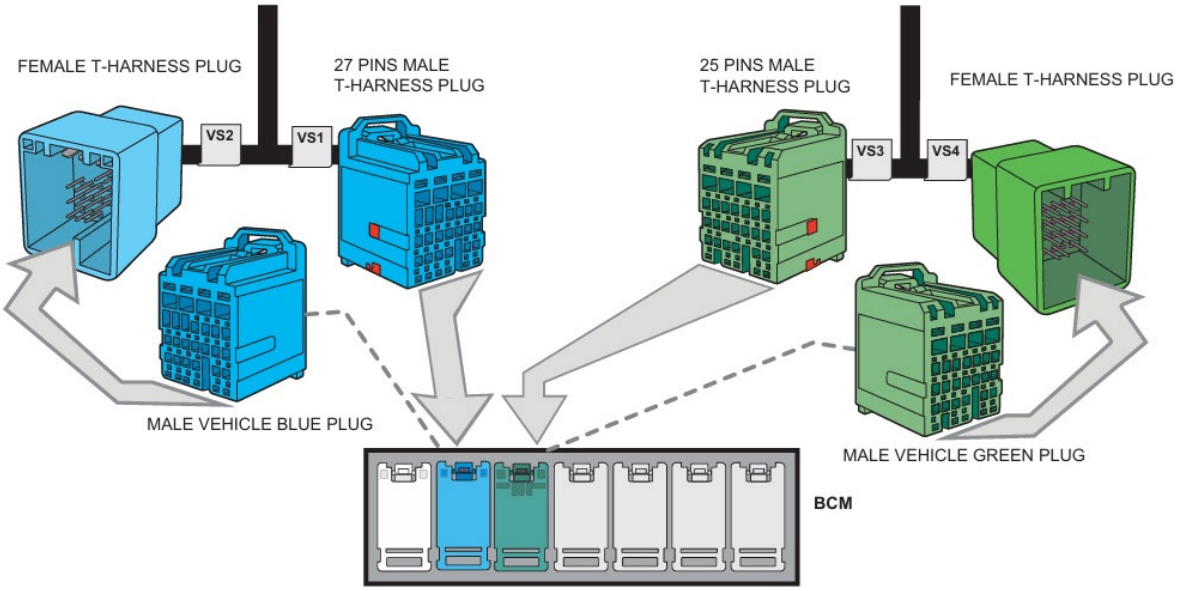

Accessing the BCM Connectors

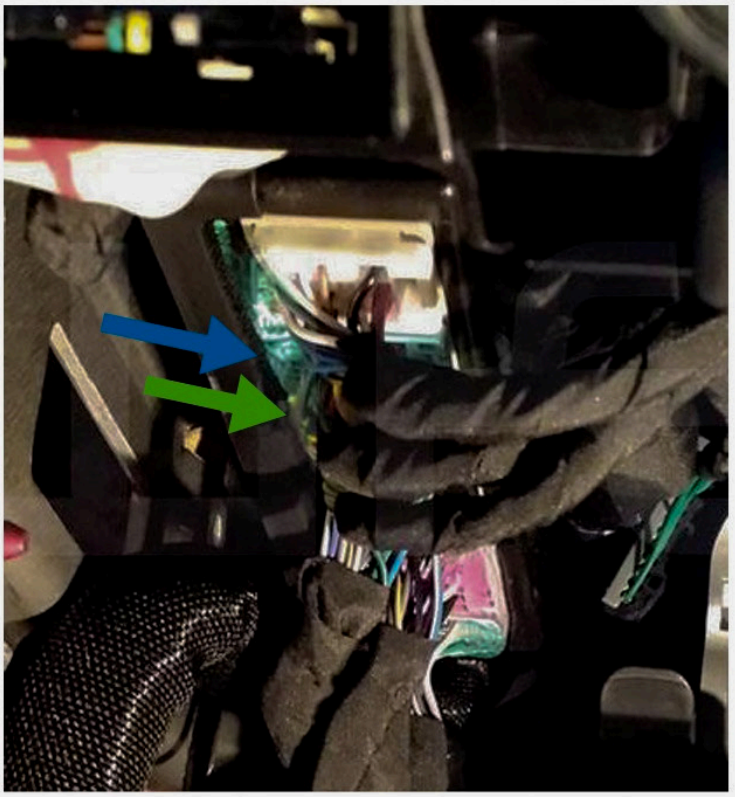

The BCM is located above the E-brake behind the left side of the dash with plugs facing downward. To access the BCM connectors remove the insulator trim above the pedals by removing two (2x) screws at the front corners, releasing a pop clip at the center and then pulling the panel toward you.

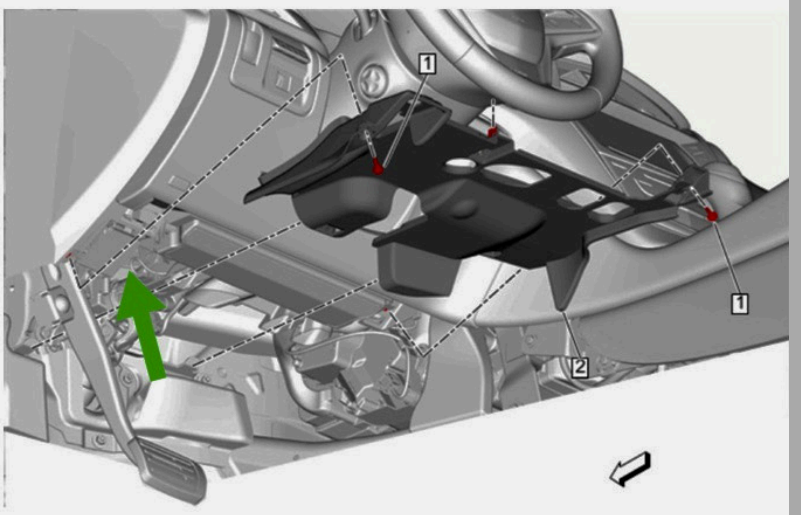

Use the VS1 and VS2 connectors to connect into the Blue connector (2nd from left) on the BCM.

Use the VS3 and VS4 connectors to connect into the Green connector (3rd from left on the BCM.

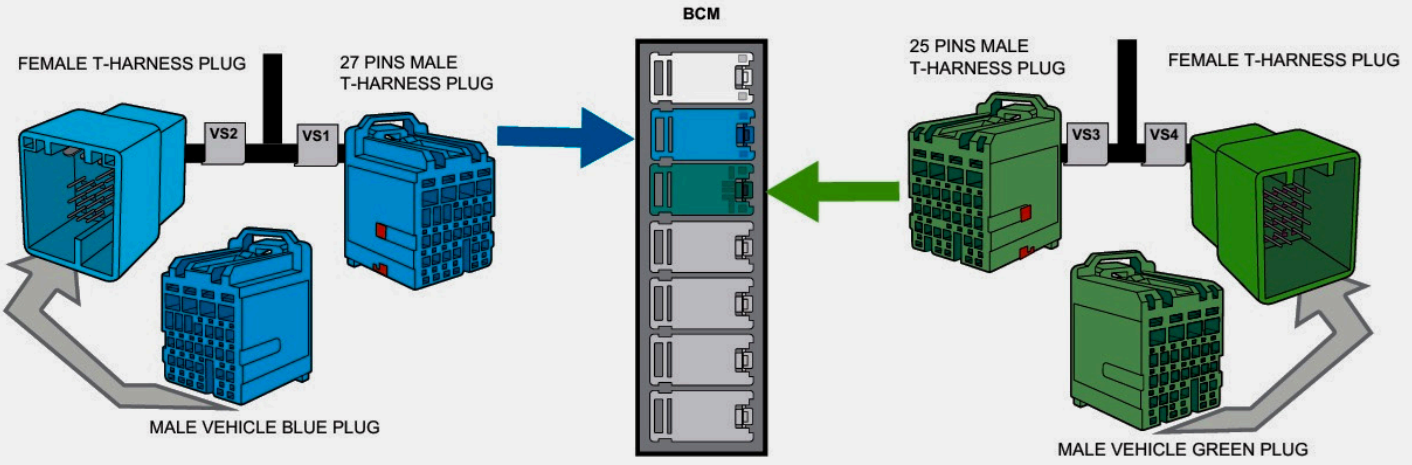

Accessing the BCM Connectors

The BCM is located above the drivers kick panel behind the left side of the dash with plugs facing downward.

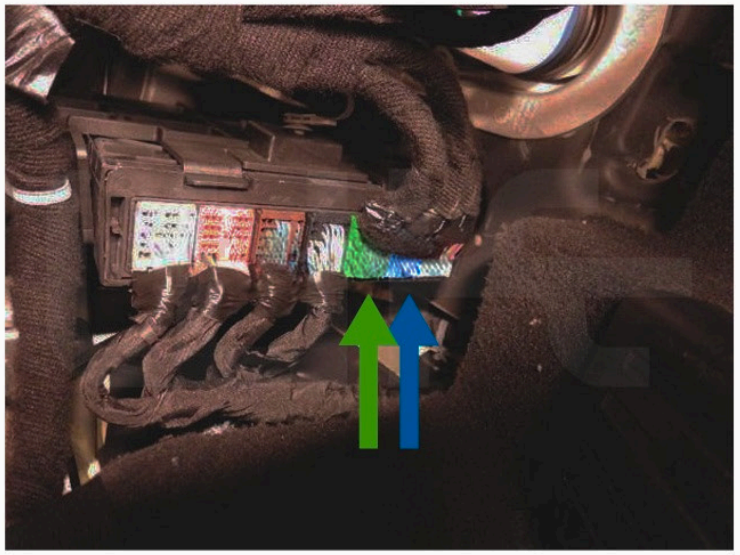

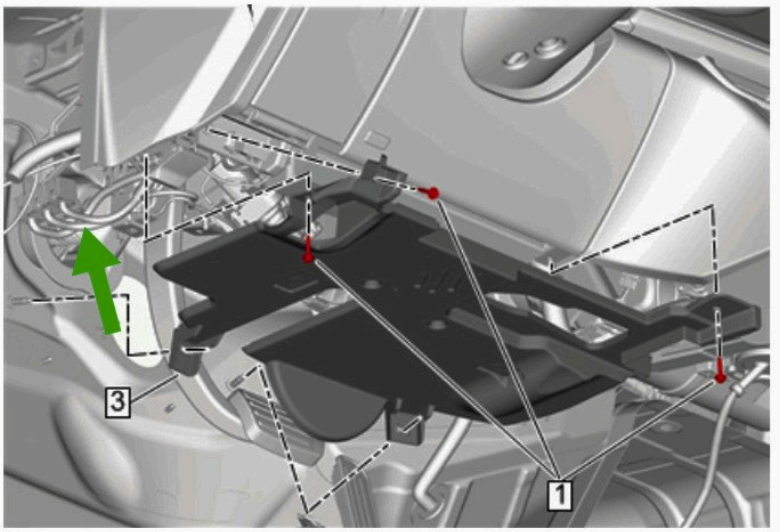

To access the BCM connectors remove the insulator trim above the pedals by removing three (3x) screws at the front corners, and then pulling the panel toward you.

Use the VS1 and VS2 connectors to connect into the Blue connector (2nd from left) on the BCM.

Use the VS3 and VS4 connectors to connect into the Green connector (3rd from left) on the BCM.

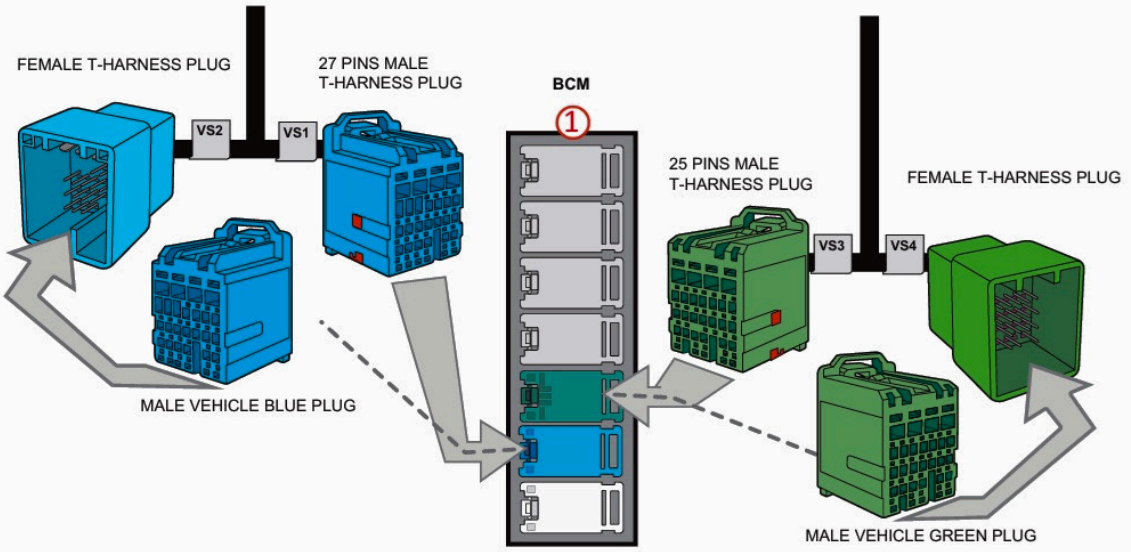

Accessing the BCM Connectors

The BCM is located on the floor beneath the front of the center console, to access it you'll need to remove the passenger side console trim.

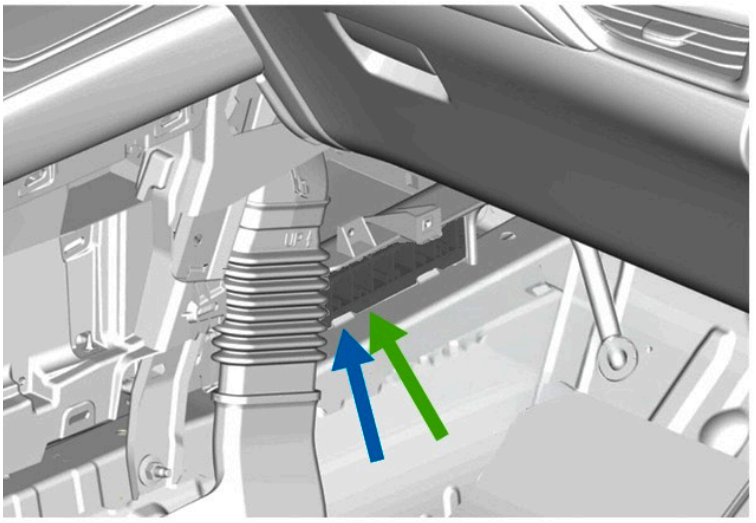

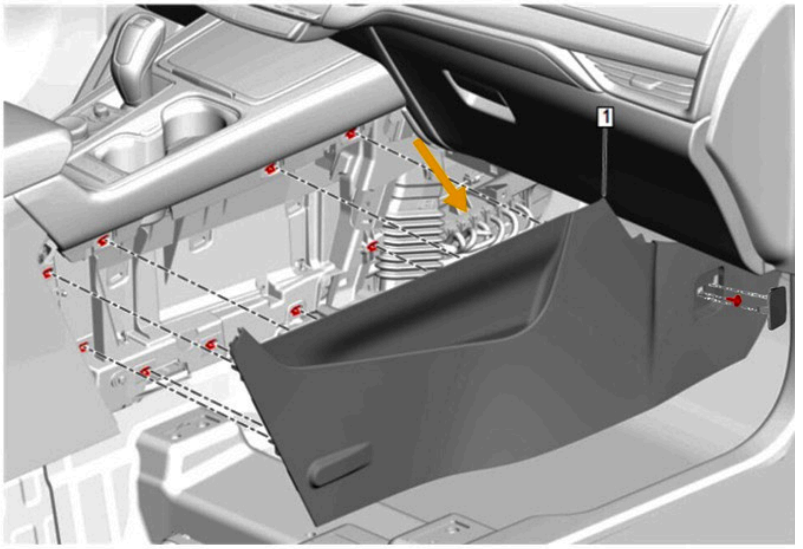

Remove the bolt cover and bolt from the front of the panel and then pop the panel loose with the aid of a panel removal tool. .

Use the VS1 and VS2 connectors to connect into the Blue connector (2nd from left) on the BCM.

Use the VS3 and VS4 connectors to connect into the Green connector (3rd from left on the BCM.

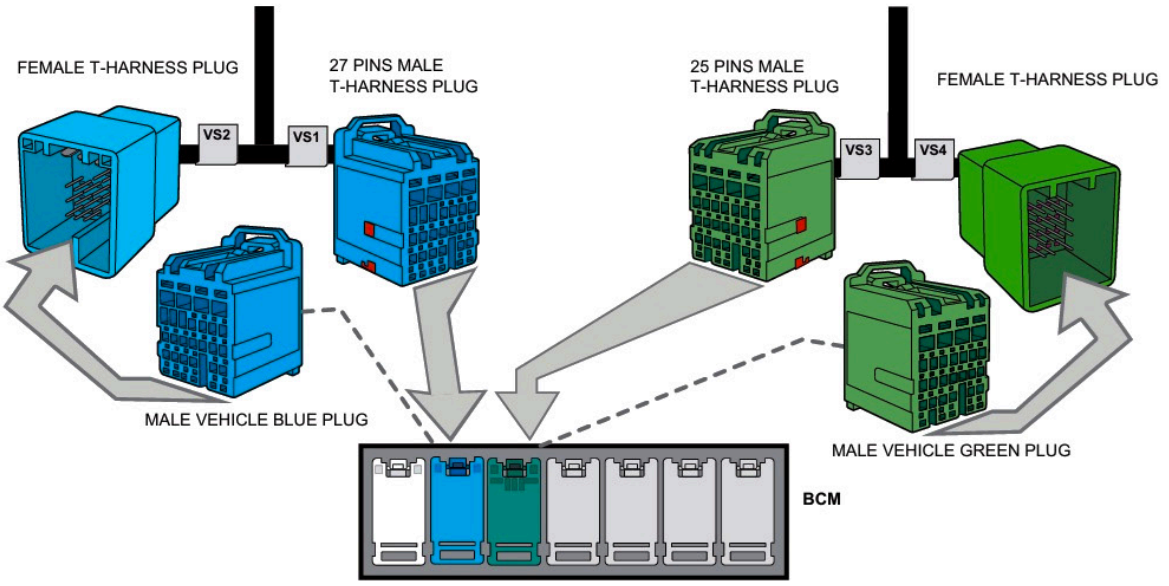

Accessing the BCM Connectors

The BCM is located on the floor beneath the front of the center console, to access it you'll need to remove the passenger side console trim.

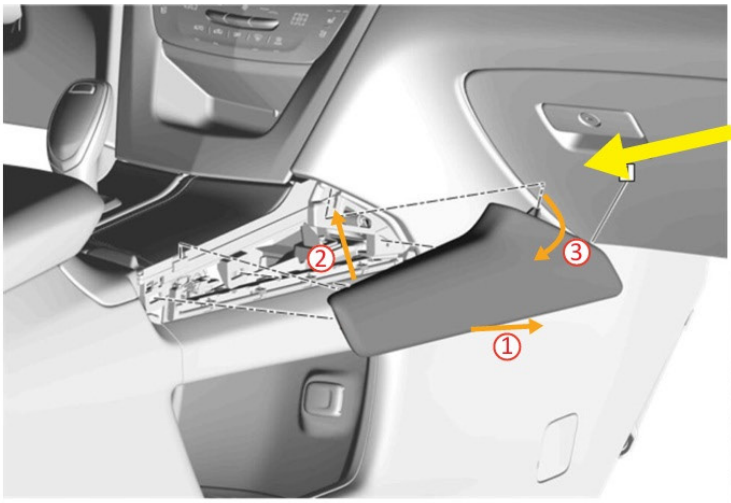

Step 1: Remove the trim on the top passenger side of the console. To remove, use a panel removal tool to pop the bottom up the trim out and then rotate the back of the panel upwards and front of the panel down to clear the guide tabs from the dash.

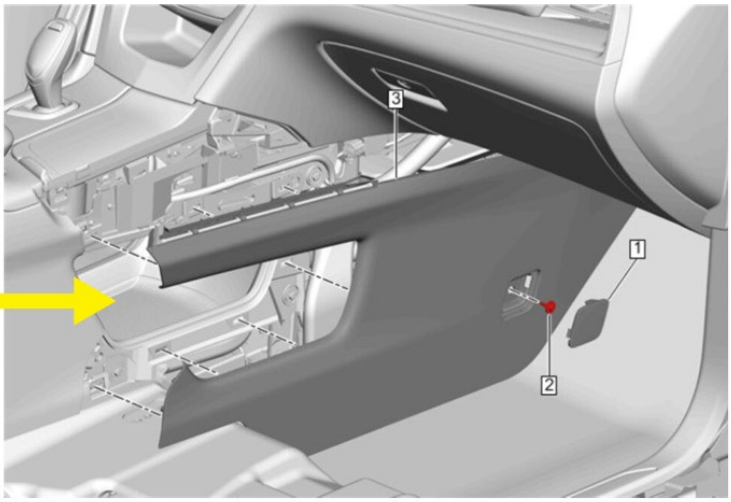

Step 2: Remove the bolt hole cover and bolt toward the front of the panel, then with the aid of a panel removal tool work your way around the panel to release the pop clips and remove the panel.

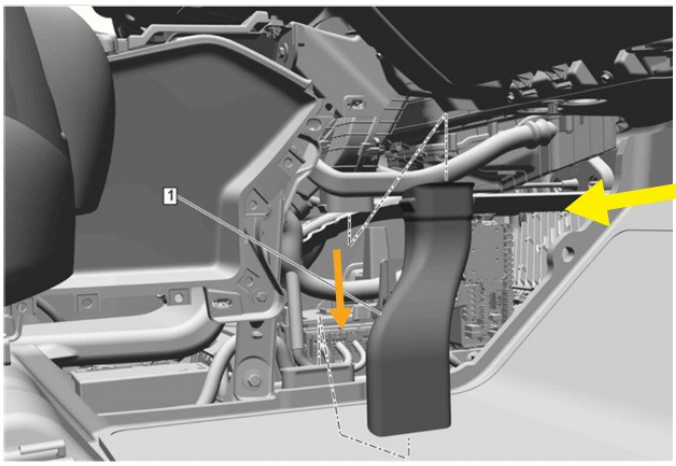

Step 3 (optional): The floor vent extension may be blocking access to the connectors we need, it can be removed easily for better access.



Use the VS1 and VS2 connectors to connect into the Blue connector (2nd from left) on the BCM.

Use the VS3 and VS4 connectors to connect into the Green connector (3rd from left on the BCM.

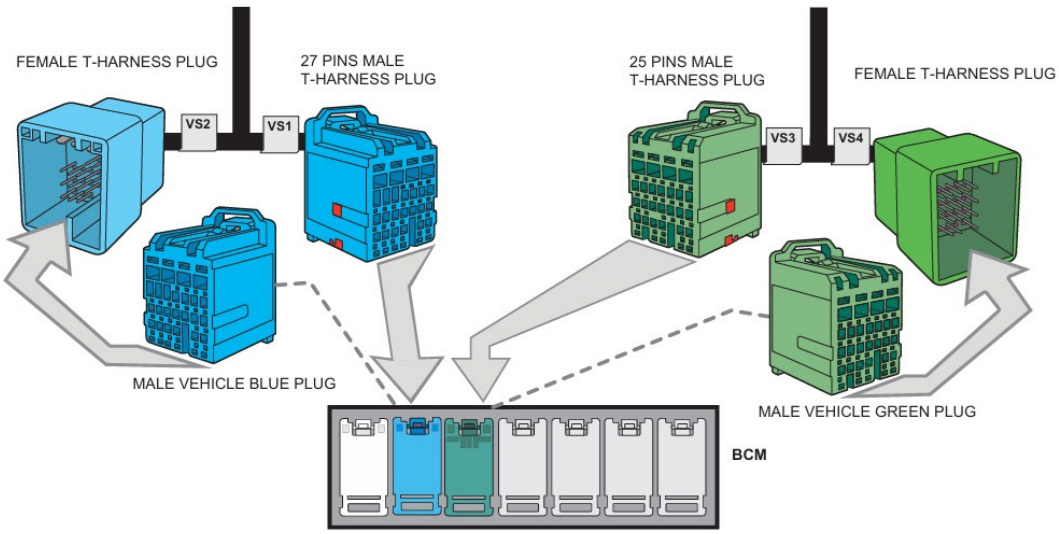

STEP 3: PROGRAM THE MODULE AND FOLLOW KLON INSTRUCTIONS

Your Remote Start module now needs to be paired to your vehicle. Before starting the programming sequence, make sure that all of the connectors are plugged into the module. Instructions for programming the Remote Start are below. Here are two important tips to help you avoid common mistakes:

- Follow the programming instructions for the LED1 and LED2 descriptions to monitor flashes.



MODULE PROGRAMMING PROCEDURE - 1 OF 1

01 

Remove battery from keyfob. Place key fob in key reader in armrest or center console.

Ensure all other vehicle keyfobs are at least 10 feet away from the vehicle.

02 

Close driver door. Re-open drivers door to wake up data bus.

03 

Push start button twice [2x] (or hold start button 5 seconds) to ON position.

04 

Wait, LED 1 will turn solid RED.



05 

Press Push to Start button once (1x) to set ignition to OFF position.

06 

Wait, LED 1 will flash GREEN rapidly.



07 

WARNING: Unplug module from vehicle. Disconnect power last when disconnecting module from vehicle.

Disconnect M4 20-pin connector last.

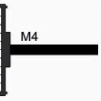

08 

Connect module to computer with USB cable and proceed with KLON extended programming.



NOTE: See download and programming in KLON steps below. Continue to Step 9 once KLON programming is completed.

09 

Connect power first when reconnecting module to vehicle.

Connect M4 20-pin connector first.

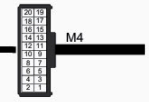

10 

Push start button twice [2x] (or hold start button 5 seconds) to ON position.

11 

Wait, LED 1 will turn solid GREEN for 2 seconds.

12 

Press Push to Start button once (1x) to set ignition to OFF position.

You may now reinsert the battery into the OEM keyfob.

*** If the vehicle is equipped with a power liftgate, Open and Close the power liftgate using the OEM keyfob at this time.**

13 

START vehicle for 15 seconds.

14 

Press and hold the brake pedal.

15 

Press and release the module's programming button.

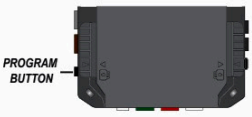

16 

Release the brake pedal.

17 

Wait, LED 2 will flash GREEN twice (



18 

Module Programming Procedure completed.

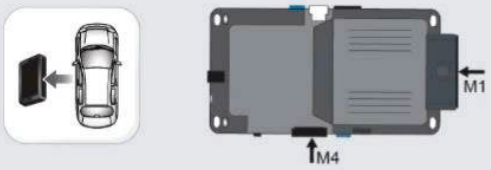

WARNING: Disconnect power last when disconnecting module from vehicle.

Disconnect all connectors first, then the M4 20-pin.
Or the M1 8-Pin (Main-Harness).

Click Here for Weblink Software

Login with this User Name: **flash@mypushcart.com**

Use This Password: **MPCFlash2025**!



KLON

Download WEBLINK updater Program
You will need to download this program to do the KLON. It requires a Windows pc or MAC with USB
weblinkupdater.com/weblinkdesktop/en





Install and Login in to WEBLINK Updater. Select Weblink RS Flash remote Starter.

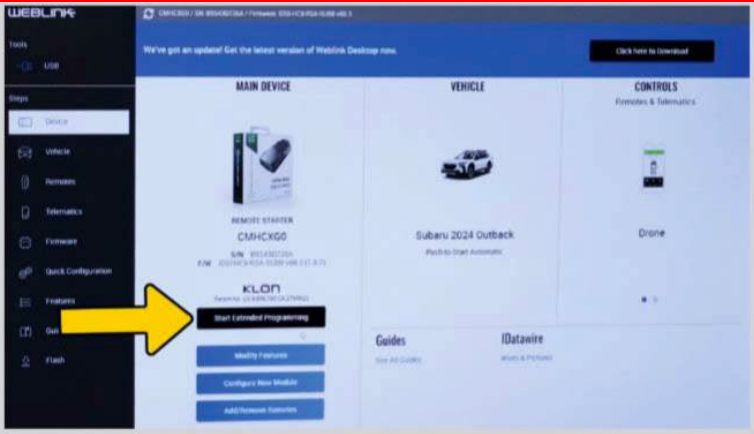

Once the device loads, select Start Extended Programming.



Select Continue Extended Programming.



Wait while KLON program processes.



Once Flash is Completed Sucessfully, select OK.

KLON Key Transponder Integration Programming Instructions Pg 3



Programming Optional RF Remote Upgrade Kits RFKIT1-2W-4

>> 
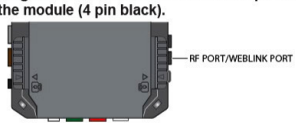

Plug the antenna into the RF/Weblink port of the module (4 pin black).

01 
WARNING: Complete the module programming procedure and tach programming procedure before programming the remotes. A maximum of four [4x] aftermarket remotes per system.

02 

Set ignition to ON position.

03 
Press and release the antenna button, then press and hold the antenna button. The antenna's LEDs will turn ON solid.

04 
Parking Light will flash once [1x]. The HCX brain will click [1x].

05 
While holding the antenna button, press once [1x] on the START button of each aftermarket remote

06 
The antenna's LEDs will flash once [1x] for each successful pairing.

07 
Release the antenna button. The antenna's LEDs will turn OFF.

08 

Set ignition to OFF position.

09 
Remote Programming Procedure completed.

Finishing up!

After confirming that everything works properly, cap off or tape the ends of any wires you're not using to avoid grounding or other contacts.

- Now gather up all the wiring and neatly bundle it together using zip ties or electrical tape to prevent the wires from interfering with any of the moving parts under the dash.
- Find a secure place to put the remote start module and use zip ties to secure it. Be careful not to zip tie near your connections as it may create a bad connection.
- Replace any interior vehicle panels that were removed to gain access to the needed wires, in reverse order that they were removed.
- Test the system as you reinstall the panels in your vehicle to make sure you do not pull something loose or pinch a wire. Be careful not to run a screw through a wire or pinch a wire while reinstalling panels.
- If your test was unsuccessful, go back and re-check your wiring and programming. Make sure the connections are tight with no bent pins or pulled wires and follow the programming steps again closely.

STEP 4: Vehicle Take Over Procedure

This system will run for 15 minutes then turn off. If you approach the vehicle while it is still running, unlock the doors, enter the vehicle and close the door, within 45 seconds, press the brake pedal and hold it down for 3 seconds, you will hear a click from the remote starter turning off and you can drive away.

01 

All vehicle doors must be closed and locked prior to remote start sequence.

02 

Press the Lock button 3 times on the vehicles OEM factory remote.

03 

The vehicle engine will start.

04 

Time rescriction. Complete Step 5 to Step 8 within 45 seconds.

05 

Press Unlock on OEM remote.

06 

Open driver door and enter vehicle.

07 

Close driver door.

08 

Press and release BRAKE pedal.

09 

The vehicle can now be put in to gear and driven..

>> 

failure to follow procedure will result in no take over and vehicle engine will shutdown.

If you have any installation questions or problems, you can create a support ticket for help at:

install.kleinn.com/support

Kleinn Automotive Accessories

520-579-1531

Copyright 2026 Kleinn Automotive Accessories

DIESEL DELAY SETTING FOR DIESEL ONLY PART 1

***This setting is an option to delay start on Diesel Trucks.**



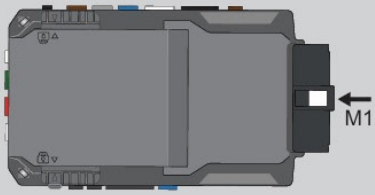

Warning: Disconnect the power connector last when unplugging from the vehicle. Unplug all the connectors first then unplug the M1 8-Pin Main Wiring Harness and bring to your PC or Laptop.

Click Here for WEBLINK Software

Login with this User Name: **flash@mypushcart.com** **Download WEBLINK updater program then**

Use Tl **o your Windows or MAC computer. Plug the module into**

the USB port of your computer using a USBA to USBC cable.

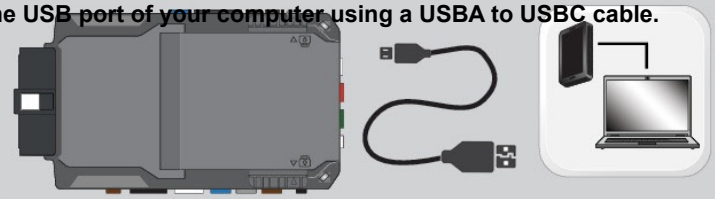

weblinkupdater.com/weblinkdesktop/en

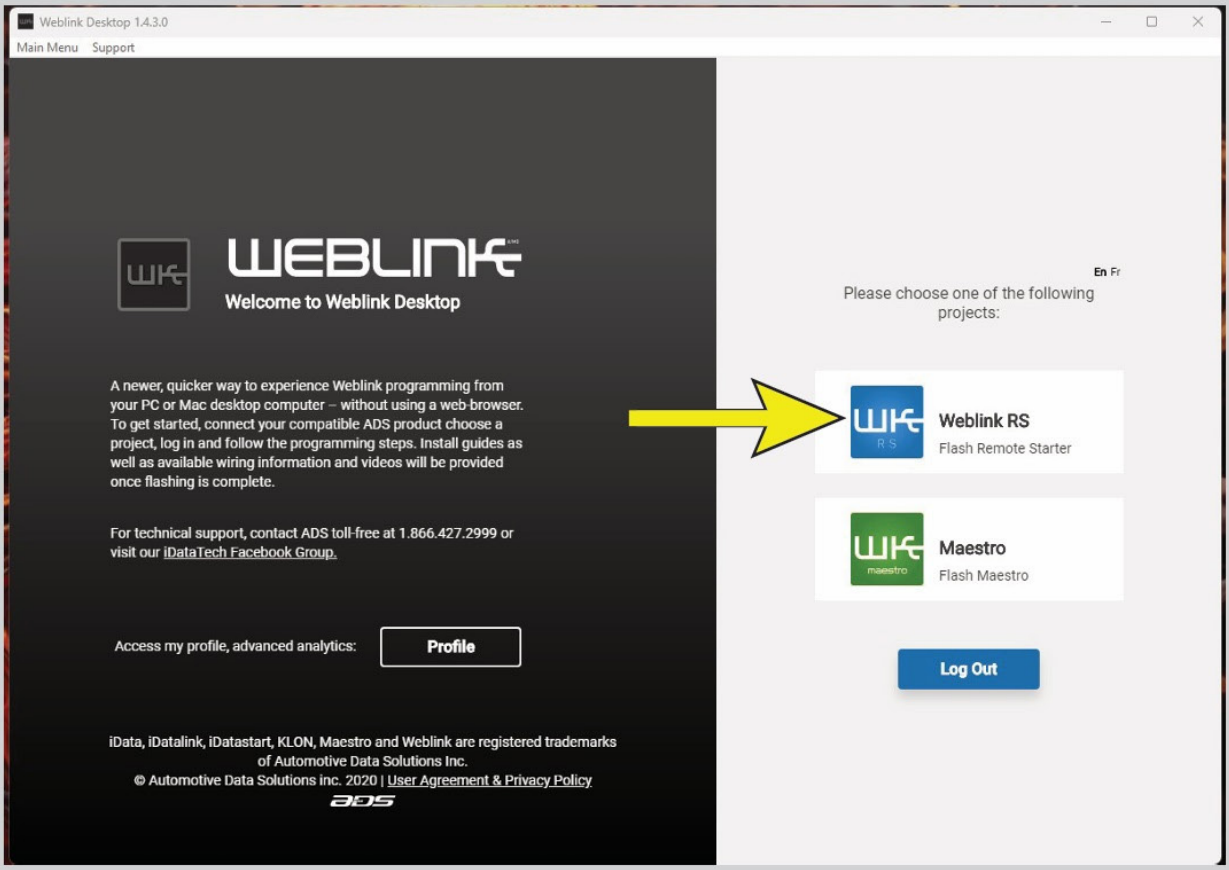

Install and Login in to WEBLINK Updater. Select Weblink RS Flash remote Starter.

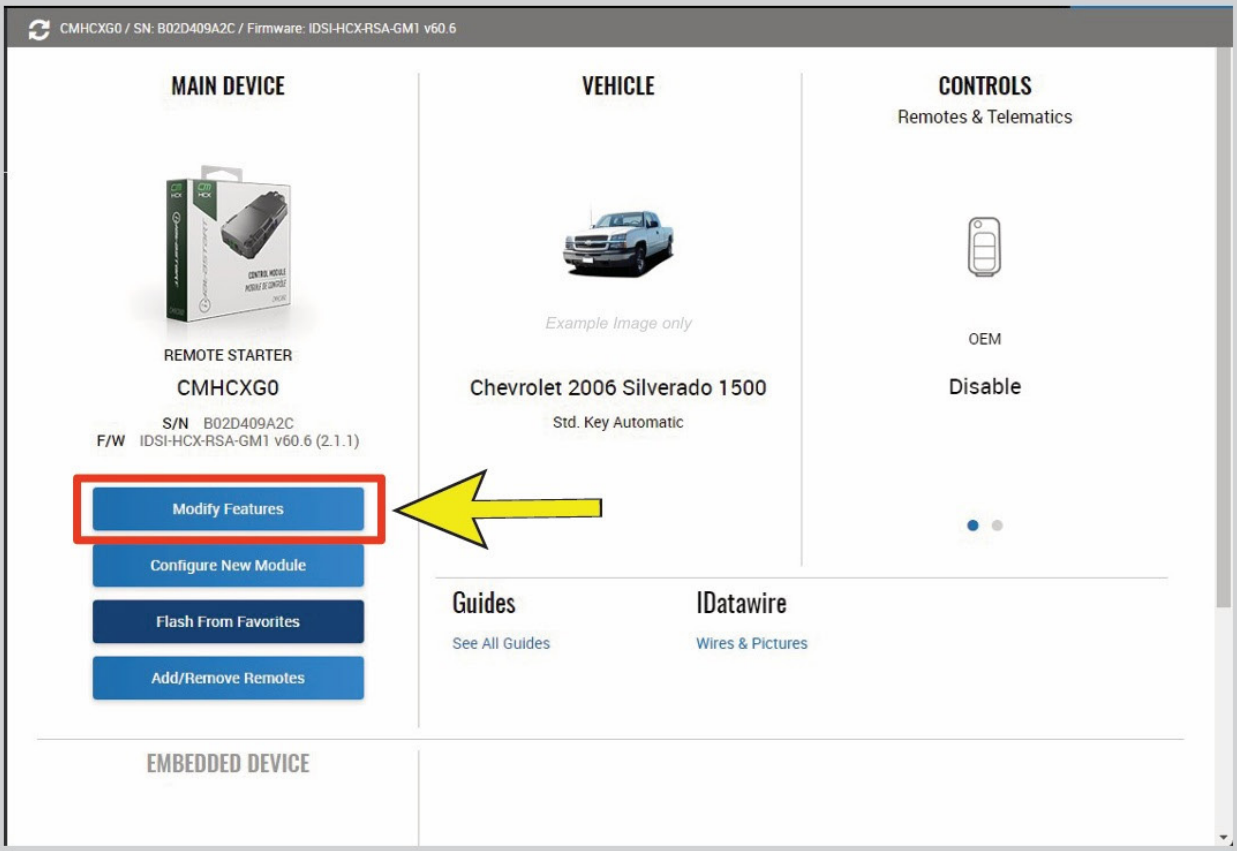

Once the device loads, select Modify Features.

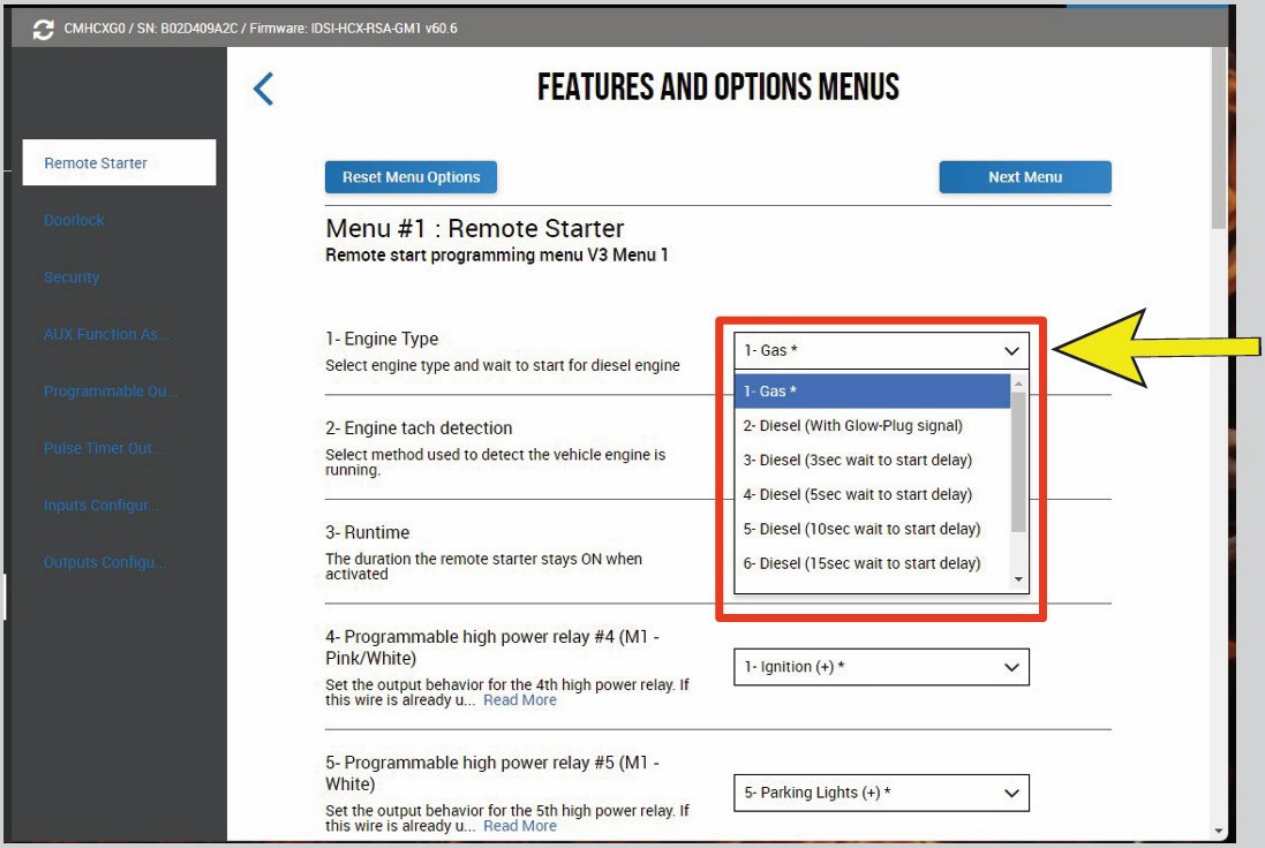

Select 1-Enigine Type drop down menu. Select your desired Diesel delay option.

Option #2 Diesel (with Glow-Plug Signal) reads the signal over data and will crank as soon as the Wait-to-Start light shuts off. Options #3 to #8 are preset Wait-to-Start times.

DIESEL DELAY SETTING FOR DIESEL ONLY PART 3

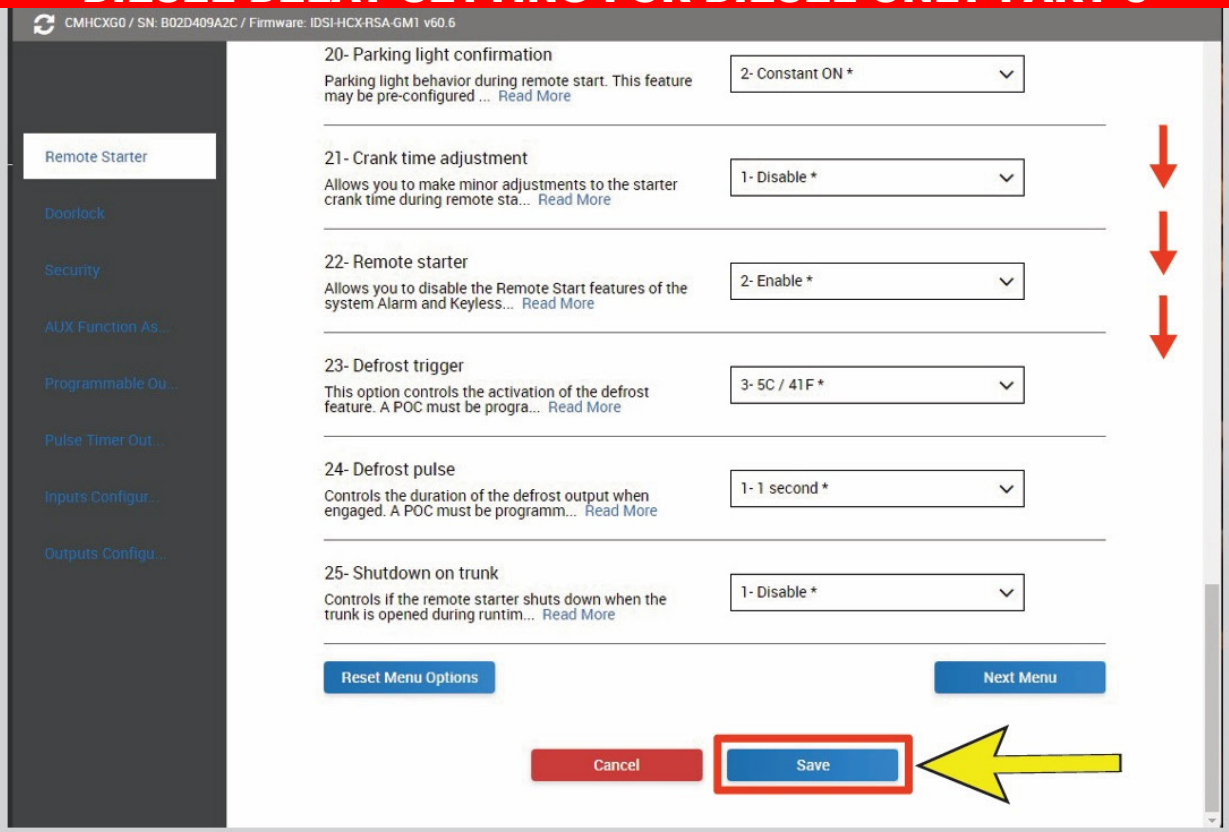

Scroll to the bottom of the page and select Save..

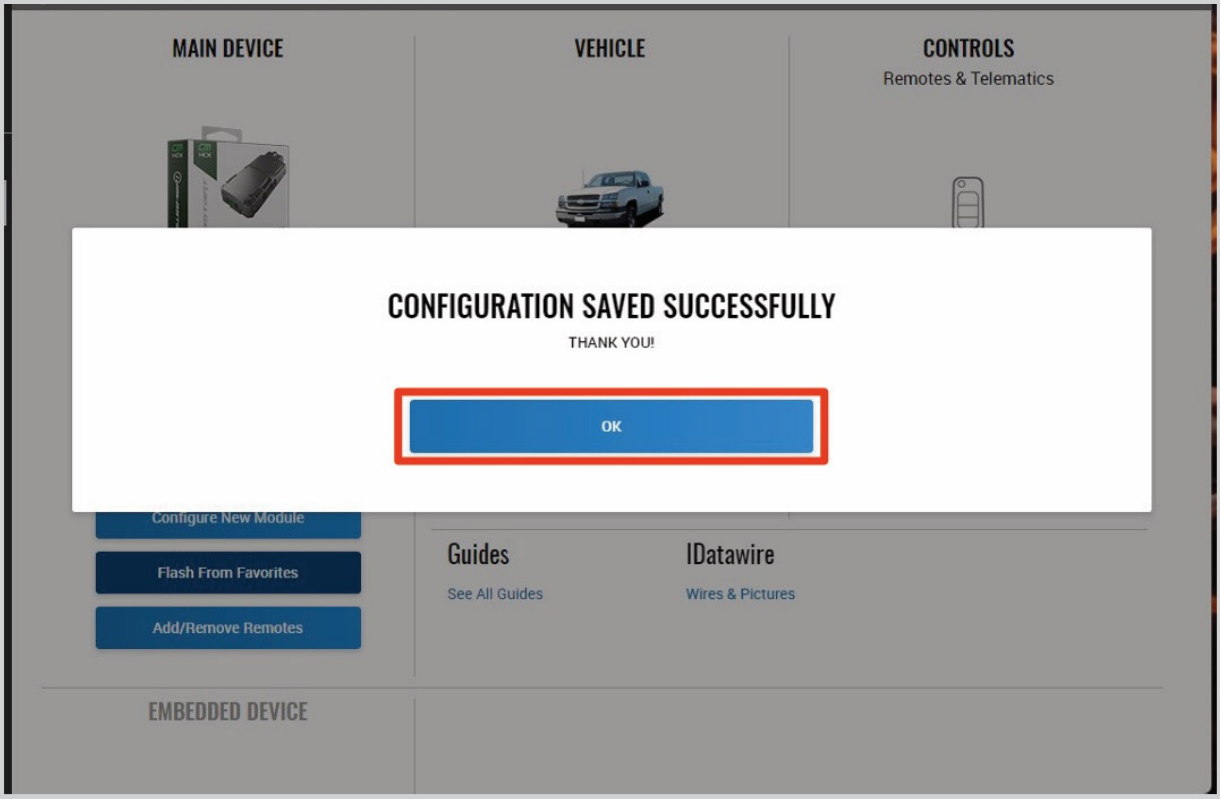

Once Configuration is Saved Sucessfully, select OK.

When programming is complete take the module back to vehicle. Connect the M1 8-Pin (Main-Harness).
Then the rest of the connectors.
After all connections have been made, continue with testing the remote start.

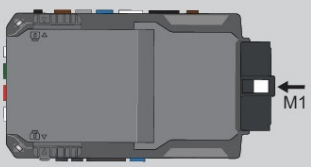



Install back in to the Vehicle

Troubleshooting Charts

When the system receives an activation command and you hear clicks from the HCX remote start module brain but the vehicle fails to start, Parking lights flash and HCX brain will click 3x times followed by a number of flashes and clicks for the diagnostics code. The second number of flashes/clicks corresponds to a remote start diagnostic error code. This will tell you why the remote starter is failing to start. The codes are as follows:

REMOTE STARTER ERROR CODES: NOTES	PARKING LIGHT FLASHES	DIAGNOSTIC
I WARNING: The following applies only when the parking lights are connected and supported by the system. II After a remote starter failure, the parking lights will flash three [3x] times followed by the error code. See table.	3 + 1	Tach is not programmed OR engine is already running.
	3 + 2	Key is in ignition ON position.
	3 + 3	Door is open.
	3 + 4	Trunk is open.
	3 + 5	Foot brake is ON.
	3 + 6	Hood is open.
	3 + 7	Loop is not cut.
	3 + 8	Vehicle failed to remote start.
	3 + 9	Vehicle movement detected (VSS).
	3 + 10	System is in Valet Mode.
	3 + 11	CAN communication failure
	3 + 12	RS not synchronized. Start vehicle with OEM key for 15 sec before trying a new RS sequence.
	3 + 13	Bypass problem.
	3 + 14	Idle mode or takeover is not available on this vehicle.
	3 + 15	Overheat protection.

REMOTE STARTER SHUTDOWN ERROR CODES: NOTES	PARKING LIGHT FLASHES	DIAGNOSTIC
I WARNING: The following applies only when the parking lights are connected and supported by the system. II If the engine shuts down after a remote starter sequence use the query command from a compatible aftermarket remote to display the shutdown error code. The parking lights will flash four [4x] times followed by the error code. See table.	4 + 1	Engine tach signal was lost.
	4 + 2	Emergency brake signal was lost.
	4 + 3	Foot brake ON detected.
	4 + 4	Hood open detected.
	4 + 5	Tach over rev detected.
	4 + 6	Glow plug timeout error.
	4 + 7	Vehicle movement detected (VSS).
	4 + 8	Check engine light ON.
	4 + 9	Low fuel level.
	4 + 10	Open door detected.
	4 + 11	CAN communication failure during RS sequence.
	4 + 12	RS not synchronized. Start vehicle with OEM key for 15 sec before trying a new RS sequence.
	4 + 13	Bypass problem.
	4 + 14	Idle mode or takeover is not available on this vehicle.
	4 + 15	Overheat protection.

MODULE STATUS DURING:	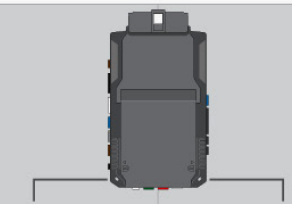 LED 2*	LED 1**	LED STATUS	DIAGNOSTIC
REMOTE START SEQUENCE	●		Flashing rapid RED	Remote start shutdown sequence.
	●		Flashing slow RED	Remote start shutdown error code. Contact technical support.
	●		Solid RED	Remote start crank delay.
	●		Flashing rapid GREEN	Remote start cycle in progress. Working correctly.
	●		1 GREEN flash	Remote start initiated successfully.
	●		3 GREEN flashes	Idle mode cycle in progress.
	●		4 GREEN flashes	Turbo mode cycle in progress.
		●	Flashing GREEN	Remote start cycle in progress. Displays vehicle platform during runtime.
		●	Rapid GREEN flashing	Secure takeover initiated. Waiting to complete takeover after brake press.
TRANSMITTER PROGRAMMING	●		Solid RED	Remote programming in progress, waiting for remote pairing.
	●		1 GREEN flash	Remote programmed.
	●		4 RED flashes	Shutdown remote starter before attempting remote programming.
	●		5 RED flashes	Engine must be off before attempting remote programming.
	●		6 RED flashes	System must be unlocked/disarmed before attempting remote programming.
	●		7 RED flashes	Module must be learned to the vehicle before attempting remote programming.

* LED 2 (RS) displays generic diagnostic codes specific to the remote start module. Orange LED flashes may appear red.
** LED 1 (Bypass) displays diagnostic codes specific to the firmware loaded on the module.
Visit the programming diagnostics page for more information.