Installation Guide

Select 2020-2024 Toyota Push to Start Tacoma, 4Runner, Sequoia, Tundra & Lexus GX460

KLEINN SKU # - RSTOY20

Toyota (Push-to-Start With Take Over)					
4 Runner	20	21	22	23	24
Tacoma	20	21	22	23	
Tundra	20	21			
Sequoia	20	21	22		
Lexus (Push-to-Start With Take Over)					
GX460	20	21	22	23	

***Compatible with automatic transmission vehicles manufactured for sale in the US and Canada Only**

Introduction:

Follow this guide closely as it covers multiple vehicles. Some 2022+ 4-Runner will require use of the TOY13-OBD t-harness outlined in step 2.1. The Cert ECU & DCM locations vary based on the model.

- **Pre-Flashed Module:** The correct firmware is installed on the remote start module. No programmer needed.
- **Activation**: Press the OEM lock button 3 times to remote start the vehicle.
- **Wiring Steering Lock Connection** Step 2
- **Tacoma Wiring** Steps 2.1-2.4
- **4Runner Wiring** Steps 2.5-2.6
- **Tundra / Sequoia Wiring** Steps 2.7-2.8
- **Programming:** Program the module to the vehicle, no PC or Flasher required. Step 3
- **Vehicle Take Over Procedure:** Enter vehicle while remote start is running and drive away. Step 4

Remote Start Activation from OEM Transmitter:

Remote Starter Activation: Press Lock>Lock>Lock on your OEM remote to start the vehicle.

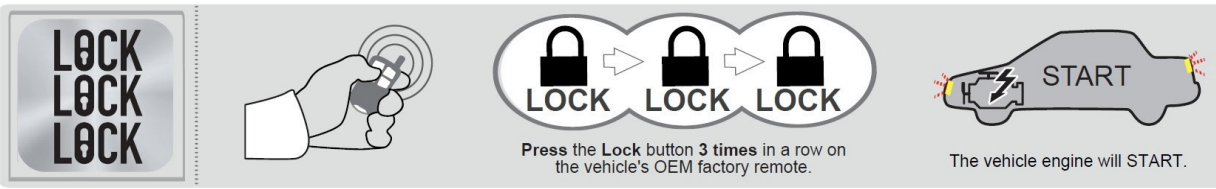

Check out our extended range RF Remote or Smartphone Control upgrade kits

Click Here for Upgrade Options

Parts Required:

- Idatalink HCX Module Pre-Flashed with TL7 Firmware
- Toyota TL7HCX - TL7-02 - 4RUN20 - TOY13OBDT-Harness (TOY13OBD harness is only needed on 2022-2024 4-Runner or any Toyota models that do not have a steering lock connector present under the steering column shroud, See Step 2.1)

Disclaimer:

Neither the manufacturer nor the distributor of these components are responsible for damages of any kind either indirectly or directly caused by the components, except for the replacement of the components in case of manufacturing defects. This guide is subject to change without notice. Refresh your browser cache or use different browser (Edge, Chrome, Firefox, etc.) to view the latest update.

- **Firmware pre-loaded:** As part of the service Kleinn provides, we have already flashed the compatible firmware version and options into your **HCX** module for you so you are ready to begin the installation in the vehicle.
- You will need to program the module to the vehicle when the installation is complete using Step 3.



Installation Overview

There are 5 basic steps to this remote start installation:

1. Preparation
2. Wiring
3. Programming
4. Testing the system
5. Finishing up!

STEP 1: Preparation

This remote start kit is a **PLUG & PLAY INSTALLATION TYPE** utilizing custom T-Harnesses which eliminate the "wire-to-wire" connections typically required. The physical attachment of t his product will require only plug-in connections. Simply plug the T-Harness into the vehicle, then program the module and the remote starter will be ready for use.

- Any vehicle panels required to gain access to the needed plugs outlined in this Tip Sheet will need to be removed. The bulk of the installation typically takes place in the driver's side under dash area. You may need to access the passenger side under dash area for some vehicles. Refer to the Wire Diagram for the locations that need to be accessed in the vehicle. Remember the order that you remove the panels.
- Wait to mount the remote start component(s) in the vehicle until after you have completed the wiring and have tested the system. Keep in mind where you plan to mount the component(s) when routing your wires to avoid having to unplug after programming. The component(s) can be mounted to a rigid wire bundle under the dash using zip ties. Look for an open and convenient location in the vehicle that will fit the component(s). Pay attention to moving parts like the pedals, e-brake and steering column. Be sure to route your wiring away from those areas. It is best to route your wires along with the vehicles factory wires, as this is typically a safe location and it keeps the install neat.
- If your T-harness has loose wires with no plugs at the end they will not be needed for standard installation in this application. Tape up any extra wires or tuck them away with the T-harness and isolate them so they are not in the way. Adding options may require additional wiring connections.

Accessing the connectors for the T-Harnesses:

- Set the parking brake and without pressing the foot brake press the push to start button twice to turn the ignition on.
- Turn the steering wheel to the right to access a screw and remove the screw.
- Turn the steering wheel to the left to access the screw on the other side and remove the screw. Use a plastic pry tool to separate the top and bottom half of the steering column cover.
- Pull the bottom cover down to separate the two halves. • Turn the ignition off by pressing the push to start button one time. The steering lock connector is now accessible at underside of the steering column.
- Remove the side dash panel and lower dash panel. It should be held on by a few clips.
- Once the side panel is off make sure there are not any screws holding the lower dash panel on. Most vehicles do not have any screws, the lower dash is secured by plastic clips. Gently pull the plastic panel and it will come unclipped.
- You will now see the ECU on the left side of the dash

Where to find connections

This harness requires 4 connections for most models compatible with the RSTOY20.

- **Exceptions:** Vehicles without a DCM or models equipped with an SOS button don't require the DCM connection.
- **Standard Locations:** The Main Body ECU and Steering lock plug are in the same location across all models.
- **Variable Locations**: The Certification ECU and DCM locations vary by model (see diagrams below).
- **4Runner** Note: The Steering lock connector may or may not be located under the steering column shroud. If it is missing, prepare the harness using the TOY13OBD t-harness connection at the OBD port instead, See Step 2.1.

Connection Locations

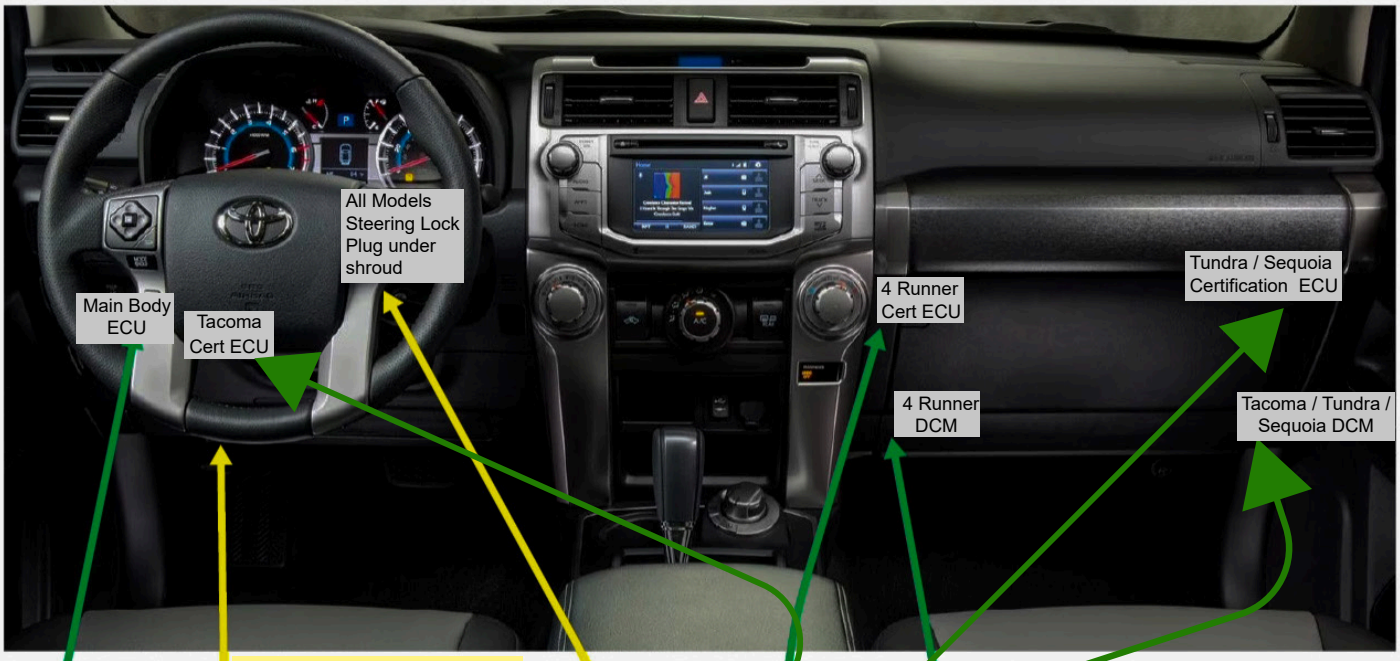

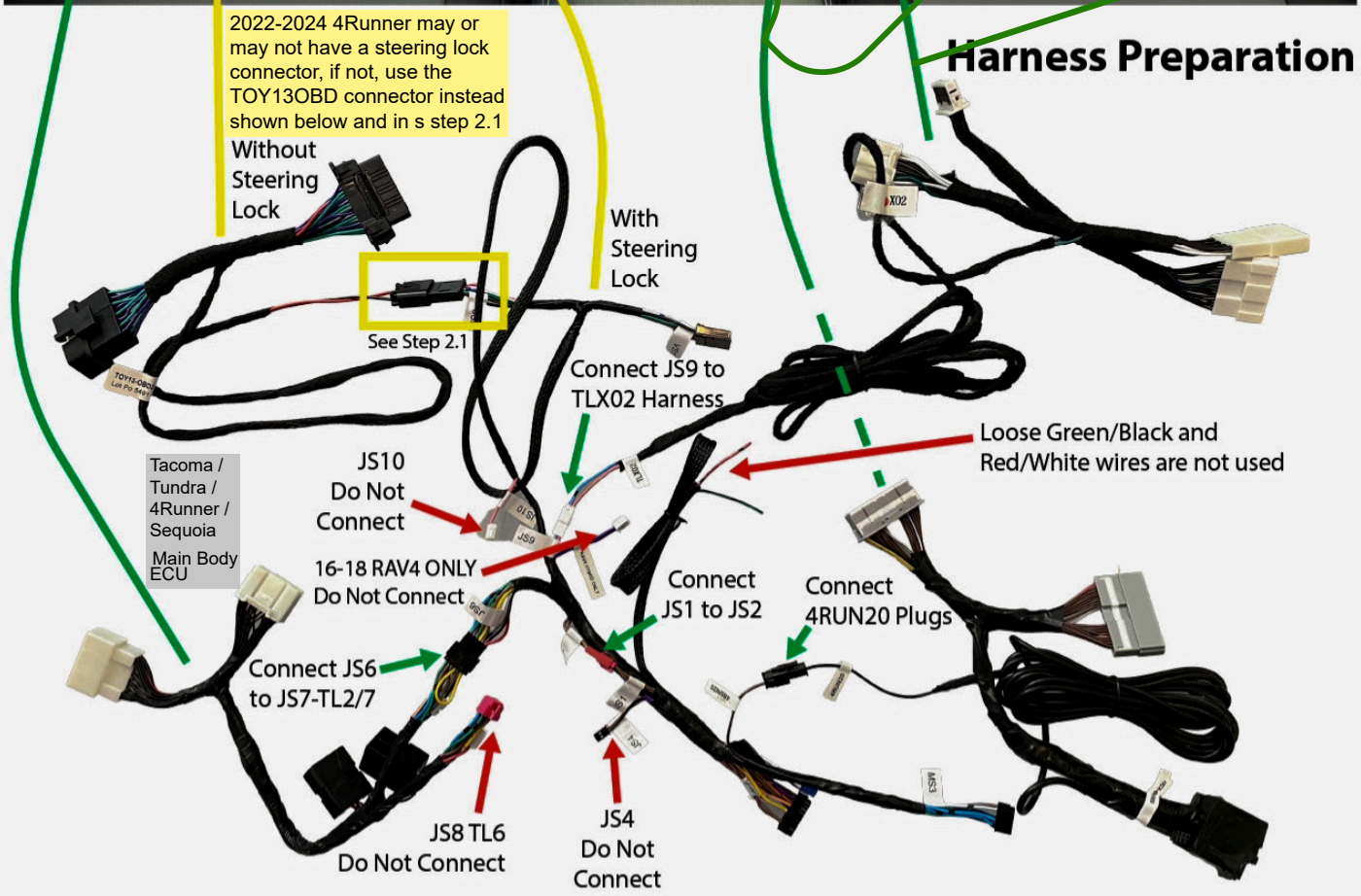

Make all harness connections to the vehicle prior to plugging the harness into the remote start module.

STEP 2: Toyota Models With Steering Lock Connector T-Harness

Remove the lower steering column cover to access the Steering Lock connector.

Rotate the wheel about 45 degrees to the left to access a phillips head screw behind the steering wheel, remove the screw then rotate the wheel back the other way to access the other screw.

Lower the bottom of the cover and release the hooks at the front of the cover from the upper cover.

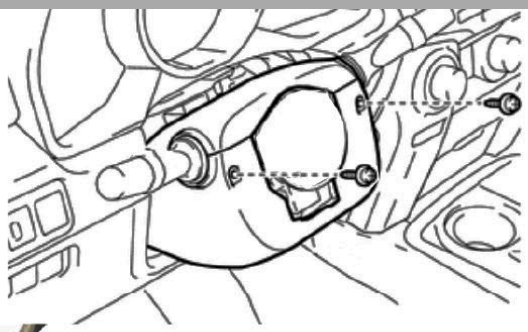

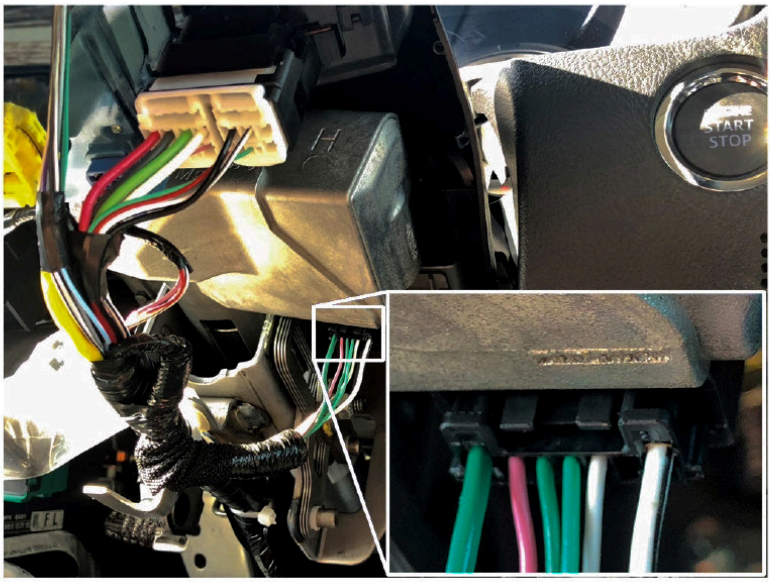

The Steering Lock Module is on the right side of the steering column about 6 inches back from the steering wheel.

Unplug the 7 pin connector from the back side of the steering lock module and plug it into VS2 on the T harness, plug VS1 back into the Steering Lock Module.

Take care to secure the harness and route the wires away from moving parts in the steering column.

STEP 2.1: Models Without Steering Lock Connector TOY13-OBD T-Harness

Validate your vehicle does not have a Steering Lock by shutting off the car, closing and opening the door, and then attempting to rotate the steering wheel. If the wheel does not lock, the vehicle likely does not have a Steering Lock. If the vehicle does have a Steering Lock and the appropriate wiring is not connected, the remote start will fail to start the vehicle.

Use the TOY13-OBD harness if the vehicle does not have a steering lock. Connect the 7 pin connector from the TOY13-OBD harness to VS2 on the main harness, VS1 will not be used.

Squeeze in the sides and push the vehicles OBD2 port back through the mounting hole and then plug it into the female port on the TOY13-OBD adapter harness. Place the male connector from the TOY13-OBD harness back into the original OBD2 port location in the vehicle.

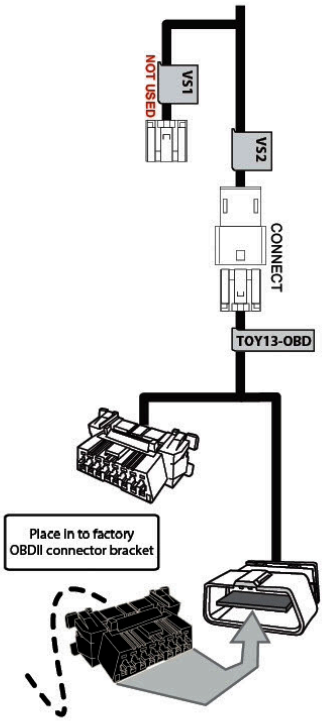

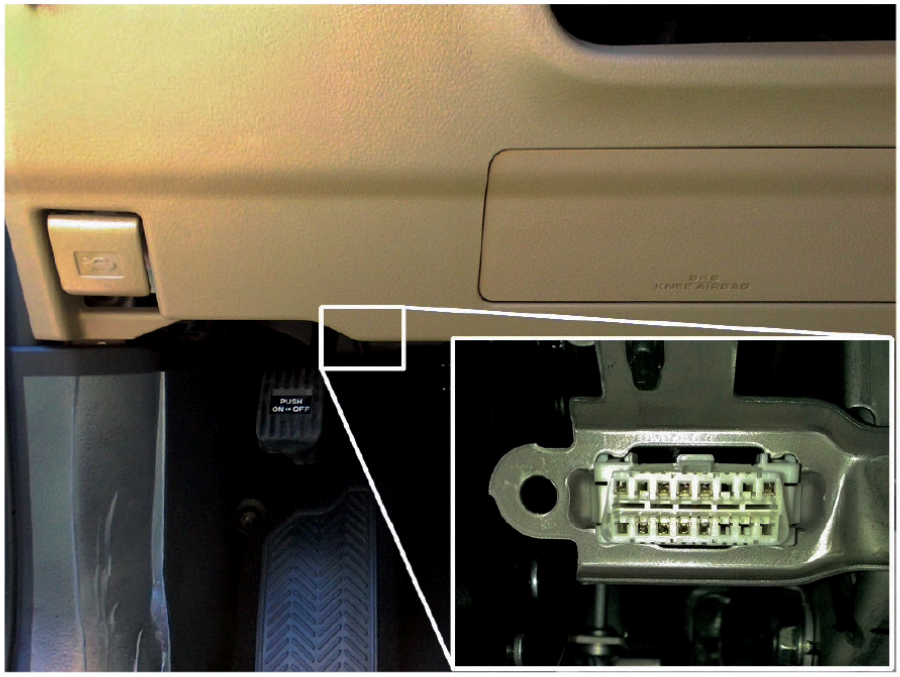

2020-2023 Tacoma Wiring Overview

Wiring Diagram

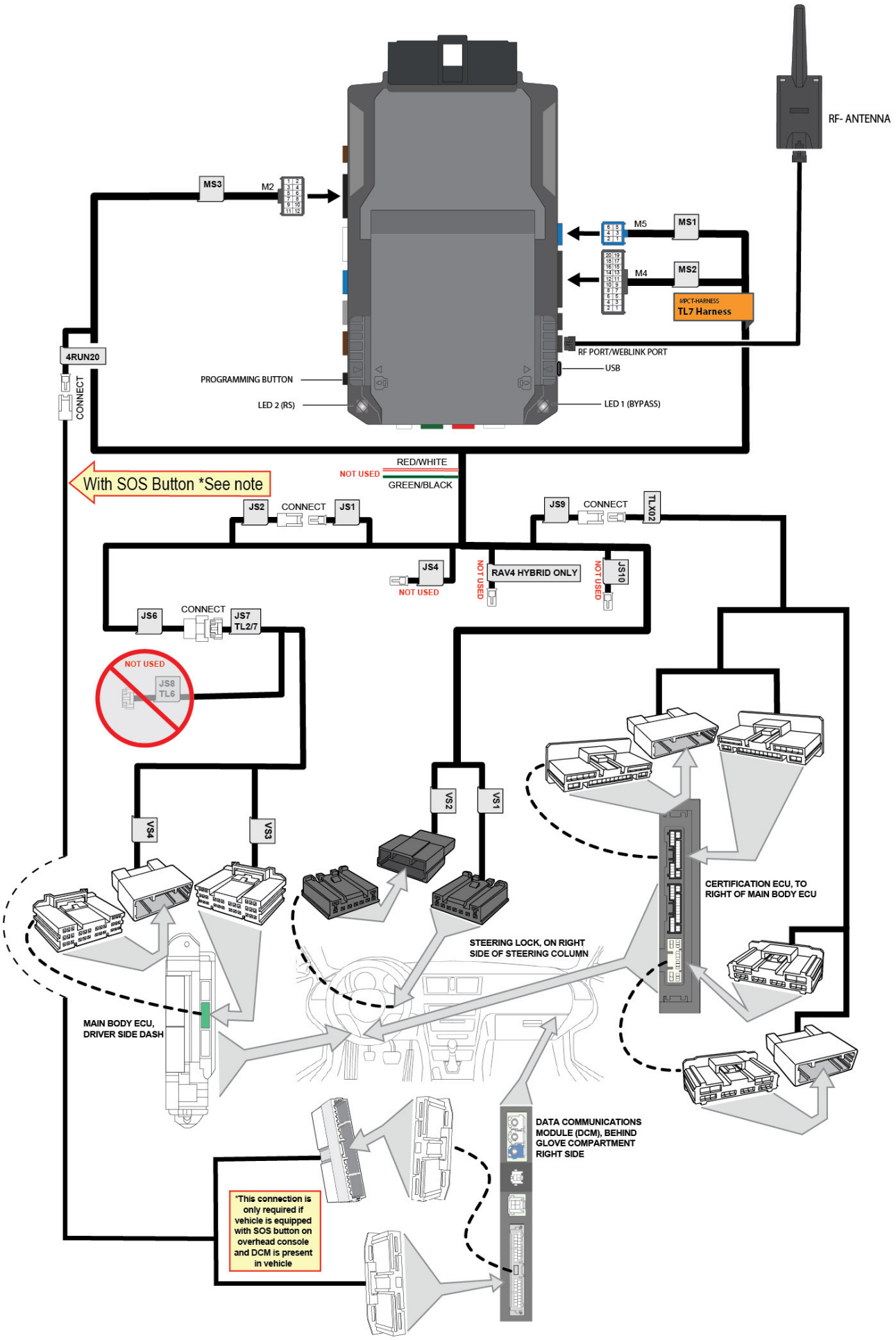

STEP 2.2: Tacoma Main Body ECU T-Harness Connection

• See Step 2.5-2.6 for 4Runner 2.7-2.8 for Tundra

Disassembly and Accessing Connectors

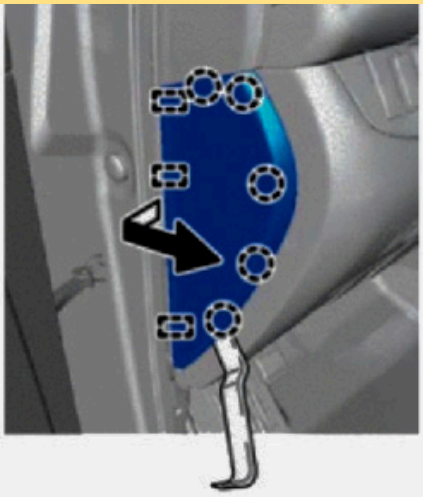

With the aid of a panel removal tool, remove the upper endcap trim.

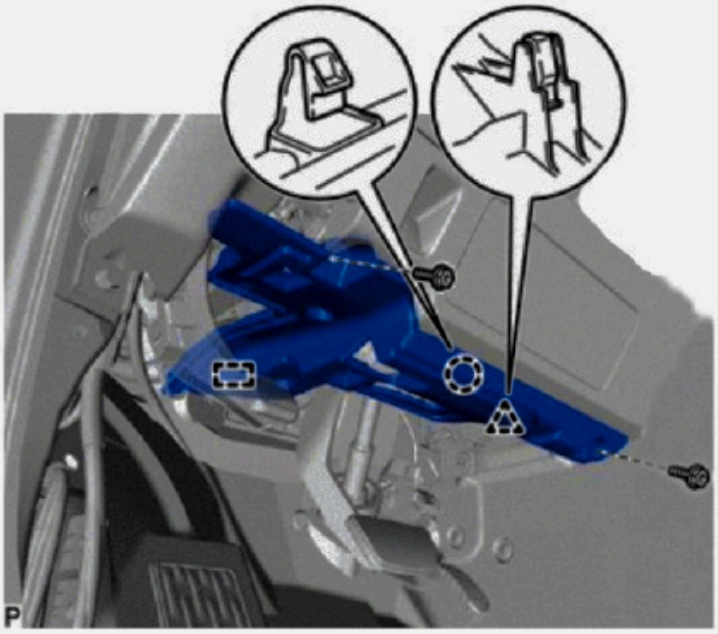

Remove two screws from the insulator panel beneath the dash, then squeeze the locking tab in the middle to release it from the dash. Pop the clip to toward the right side down and then pull the panel down and away from the firewall to remove it.

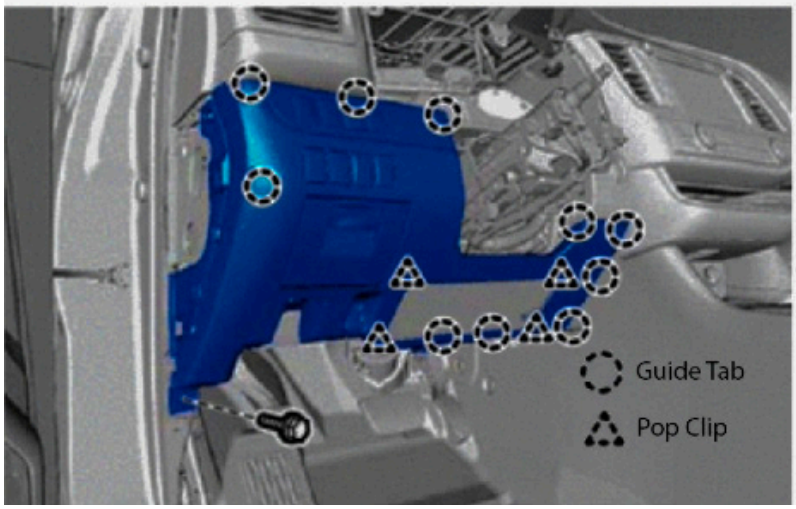

Push the kick panel to the side and remove a 10mm bolt from the bottom left corner of the panel.

Work your way around the panel with the panel tool to release the guide tabs and the 4 pop clips from the corners of the airbag opening.

Unplug the connectors as needed and position the panel aside.

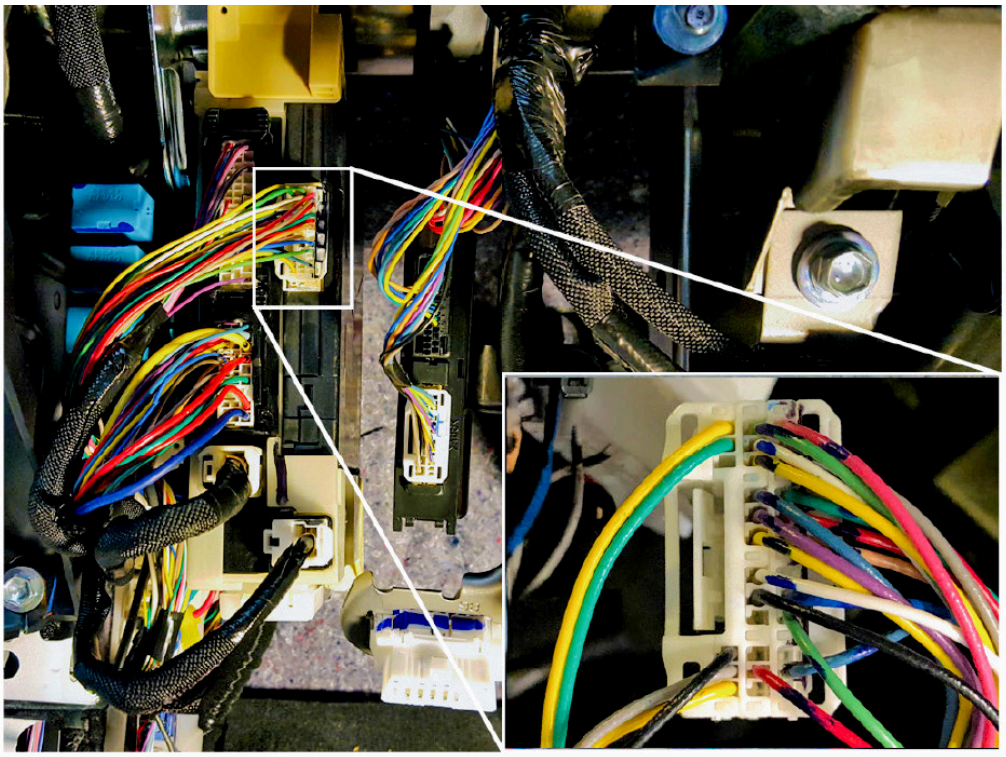

The Main Body ECU is attached to the side of the fuse box on the left side of the dash.

Unplug the Main Body ECU connector and plug it in to VS4 on the T harness, plug VS3 back into the spot on the BCM.

STEP 2.3: Tacoma Certification ECU T-Harness Connection

Disassembly and Accessing Connectors

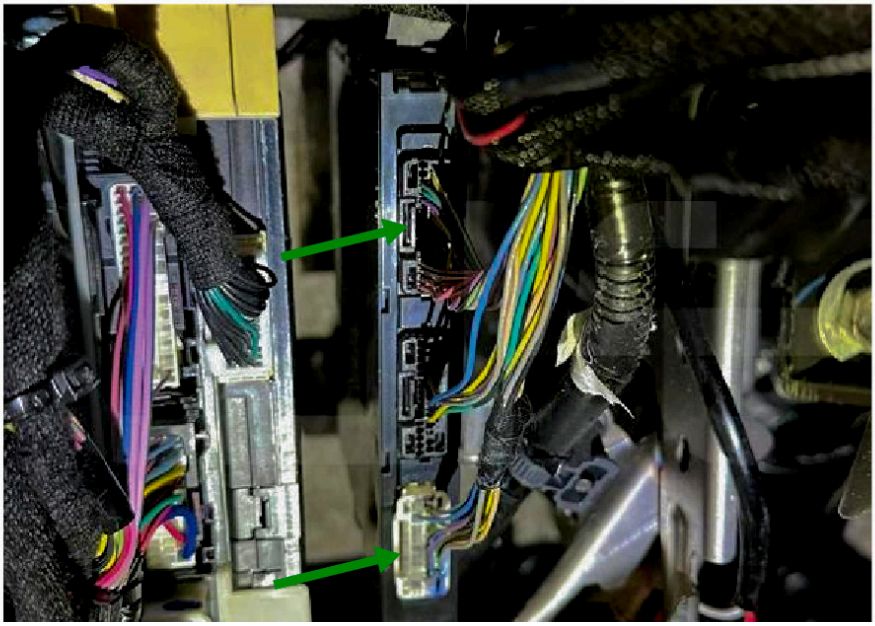

The Certification ECU is just to the right of the Main Body ECU.

Plug in the TLX02 harness' JS11 connector to the JS9 connector on the main harness. Unplug the top and bottom connectors from the Certification ECU and plug them in to the Female connectors on the TLX02 harness, plug the Male connectors from the TLX02 harness back into the respective spots on the Certification ECU.

Secure the extra length of the TLX02 harness where it won't be in the way or get caught in moving parts.

STEP 2.4: Tacoma DCM 4-RUN20 T-Harness Connection Pass Side

4RUN20 Connection at DCM

The Data Communications Module (DCM) connection is only required if the vehicle is equipped with a DCM, vehicles equipped with a DCM will have SOS buttons present in the overhead console.

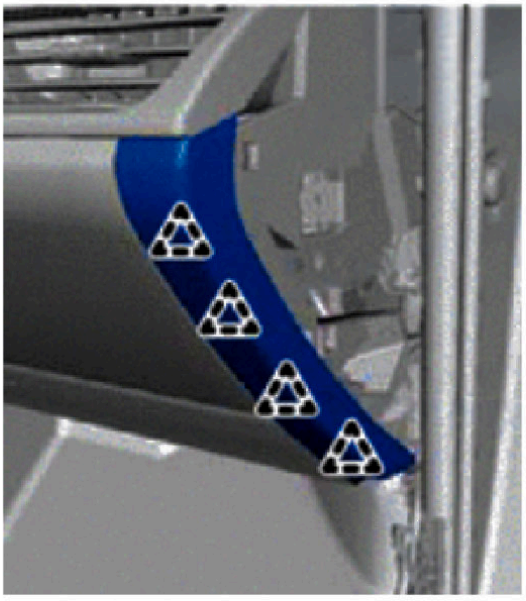

You can attempt to reach the DCM from underneath without removing the glove compartment however access is very tight and removing the compartment will make it easier to reach the connectors.

Remove the Passenger End Cap similar to how the drivers side was removed, then with the aid of a panel removal too pop the Glove Compartment End Plate free.

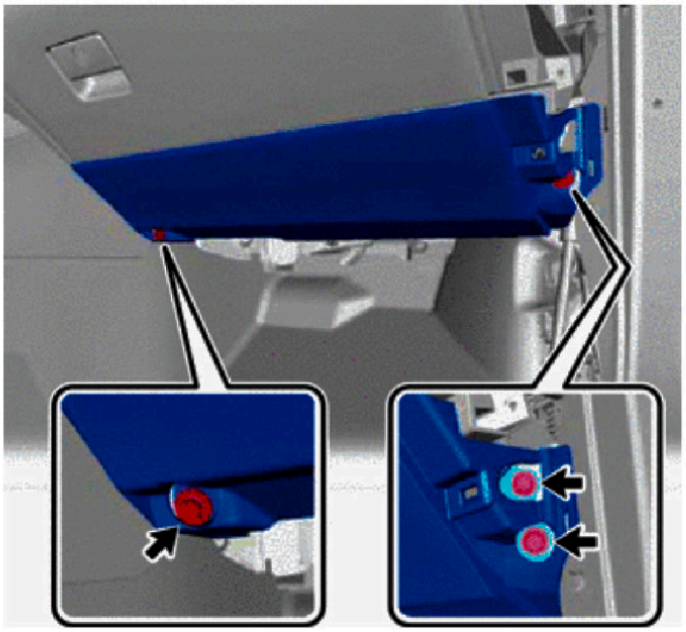

The Passenger Knee Airbag will need to be removed. Remove 1 bolt from the left side and 2 bolts from the right side then pull the airbag assembly out from the dash. Make sure the airbag is supported and do not allow it to hang from the electrical connector.

STEP 2.4 Continued: Tacoma DCM 4-RUN20 T-Harness Connection

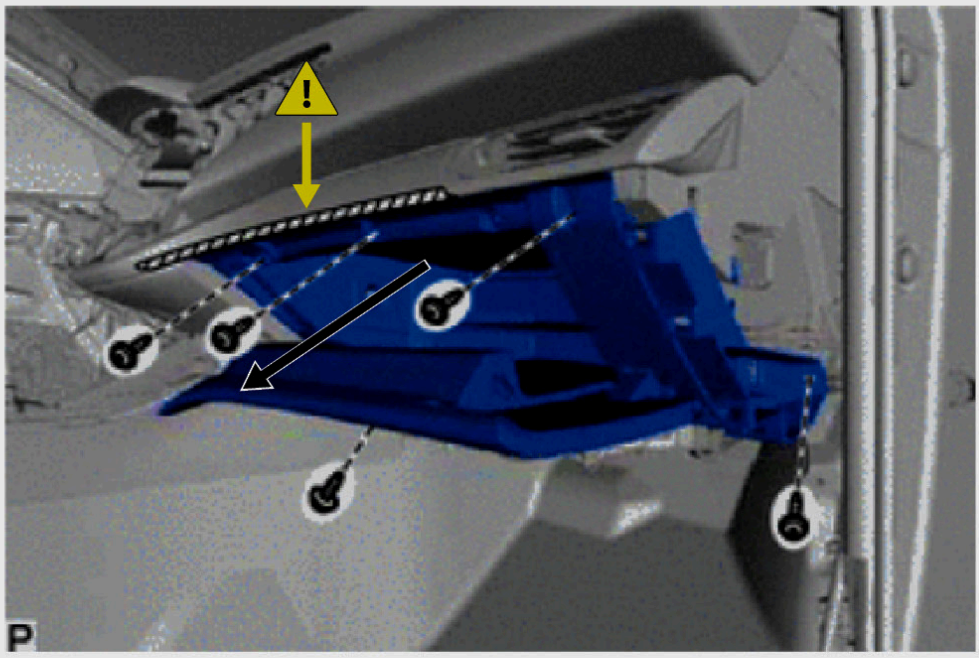

Remove 3 screws along the top edge of the glove compartment and one screw from both the bottom left and bottom right corners of the glove compartment assembly. Pull the entire assembly out from the dash and position it aside, take extra care to not scratch the trim along the upper edge of the glove compartment when removing.

The DCM is located to the right of the cabin air filter access door.

Unplug the 36 pin connector at the bottom of the DCM and plug it into the Female connector on the 4RUN20 harness, plug the Male connector from the 4RUN20 back into the DCM.

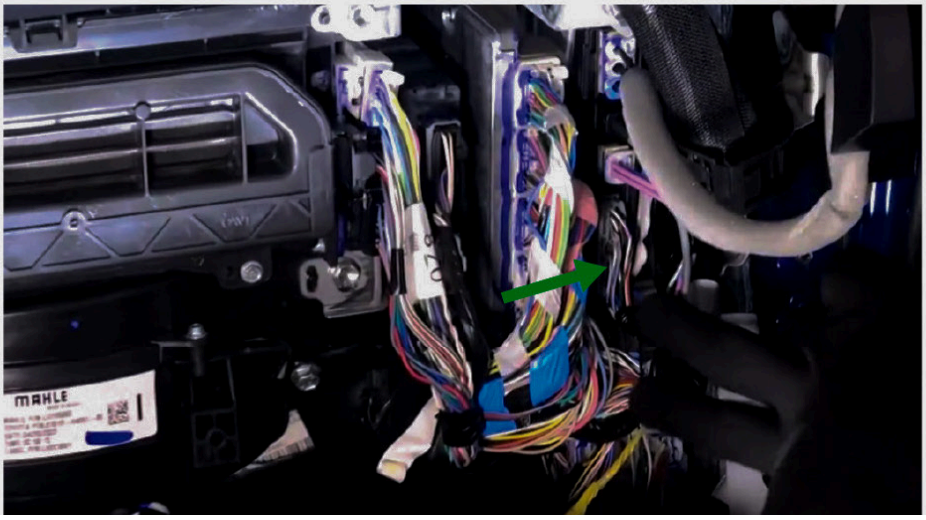

2020-2024 4-Runner Wiring Overview

Wiring Diagram

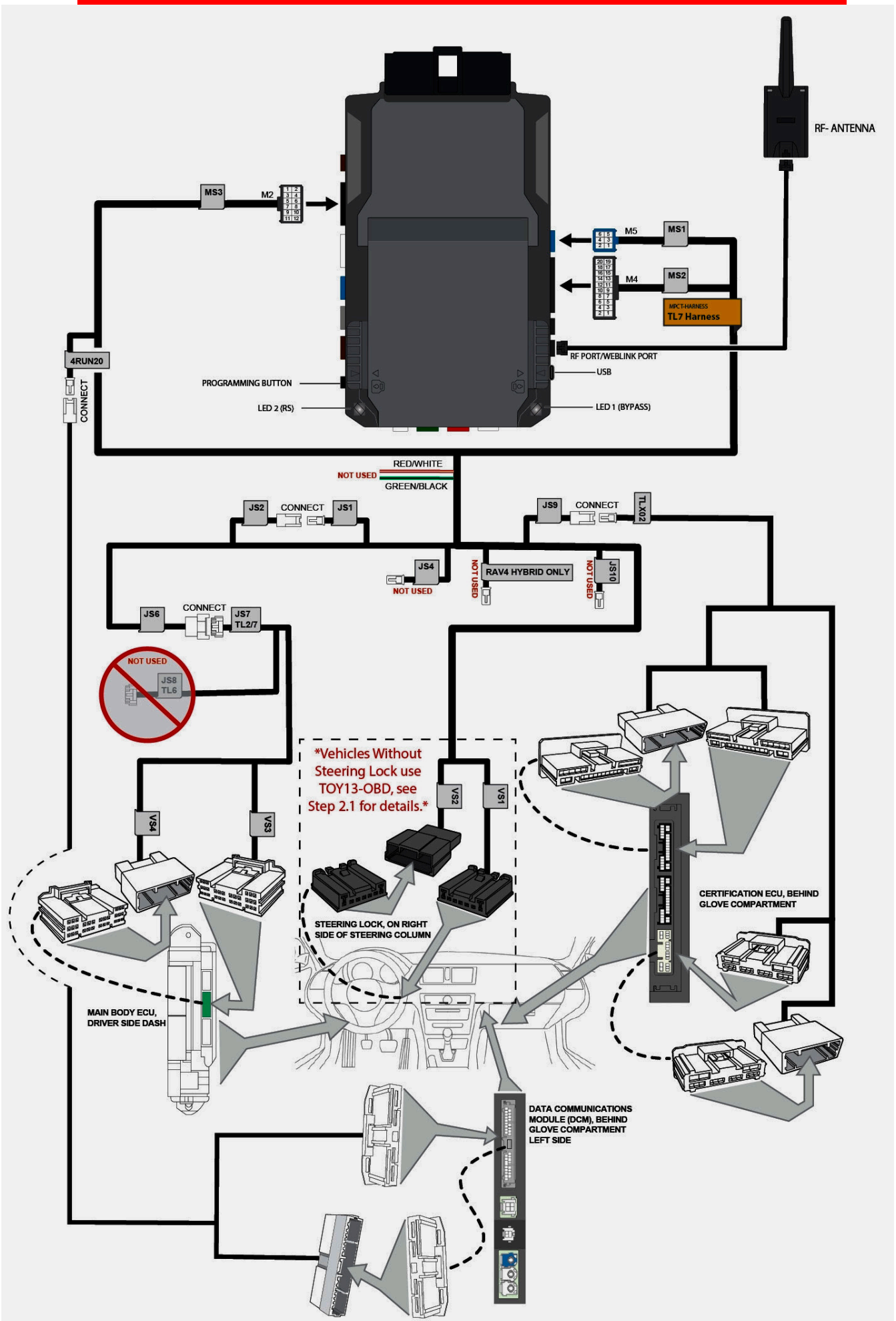

STEP 2.5: 4-Runner Main Body ECU T-Harness Connection

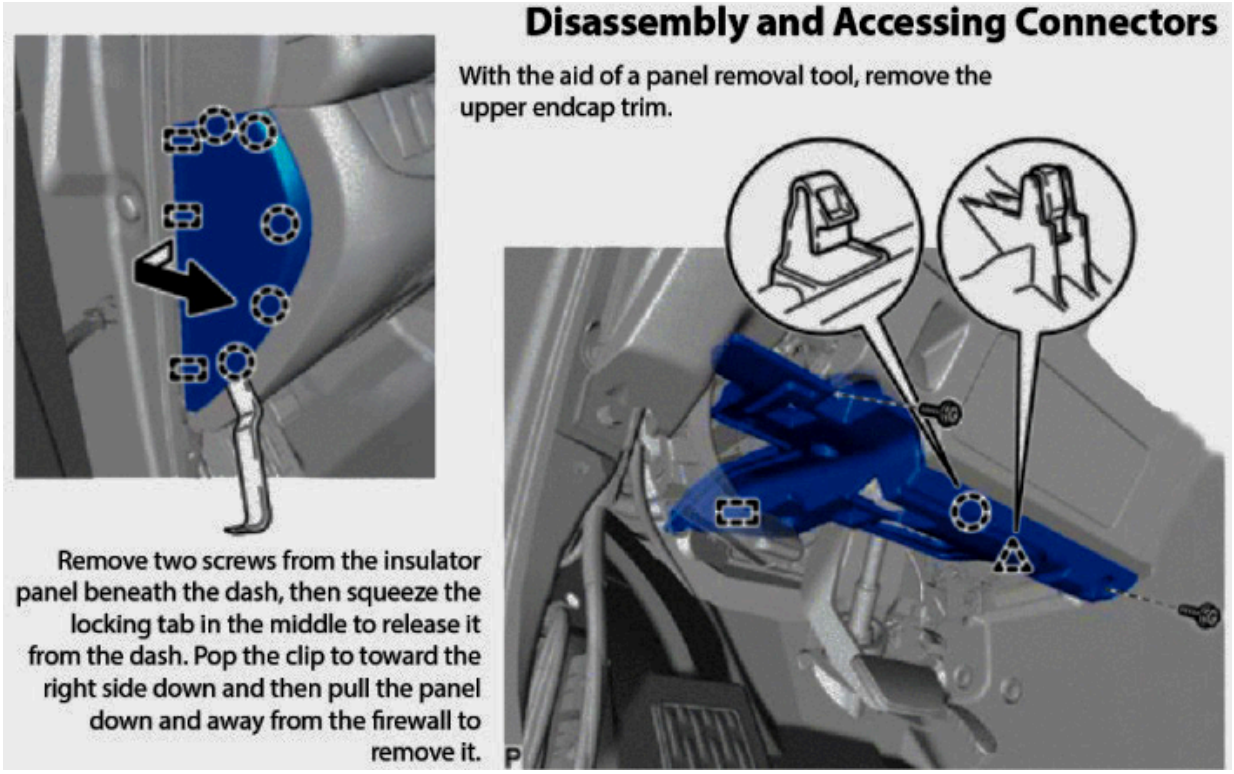

Disassembly and Accessing Connectors

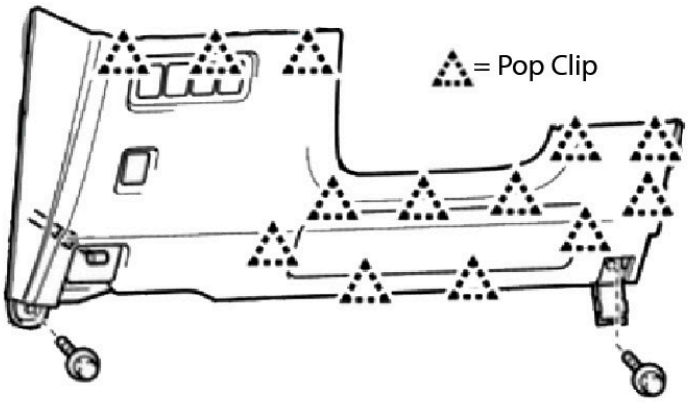

Remove the lower dash panel to access the Main Body ECU connector.

Use a panel removal tool to open the bolt cover on the lower right corner of the panel and remove a 10mm bolt.

Push the top of the kick panel aside slightly and remove another 10mm bolt from the bottom left corner of the panel.

Work your way around the panel with the aid of a panel removal tool and release the pop clips holding the panel in place. Disconnect the electrical connectors as needed to move the panel out of the way.

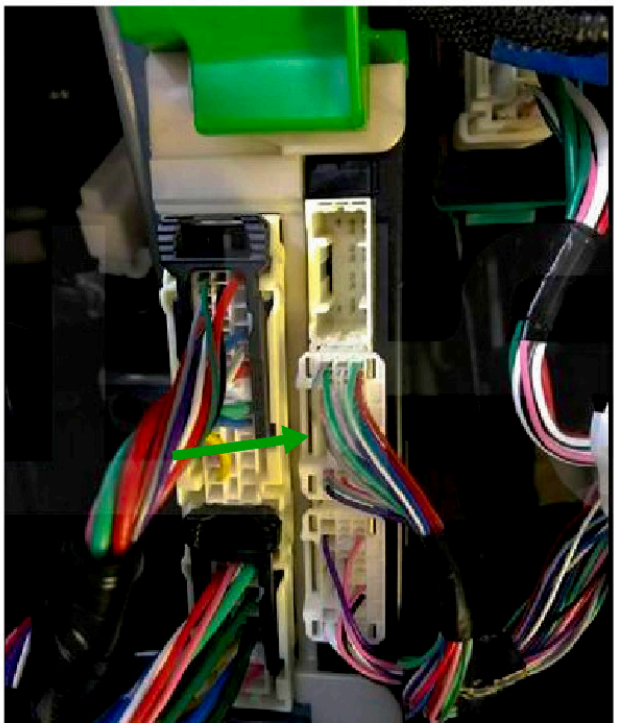

The Main Body ECU is attached to the side of the fuse box on the left side of the dash.

Unplug the middle Main Body ECU connector and plug it in to VS4 on the T harness, plug VS3 back into the spot on the BCM.

Passenger Side Disassembly and Connections

Remove the Insulator Panel from below the passenger side dash by applying pressure to release the three pop clips at the front of the panel, then lower the panel and pull it away from the firewall.

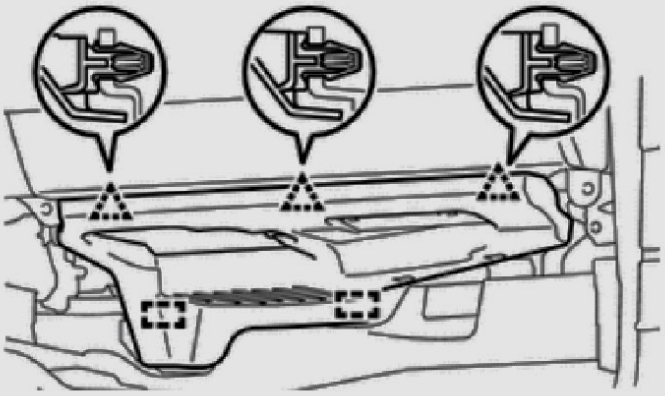

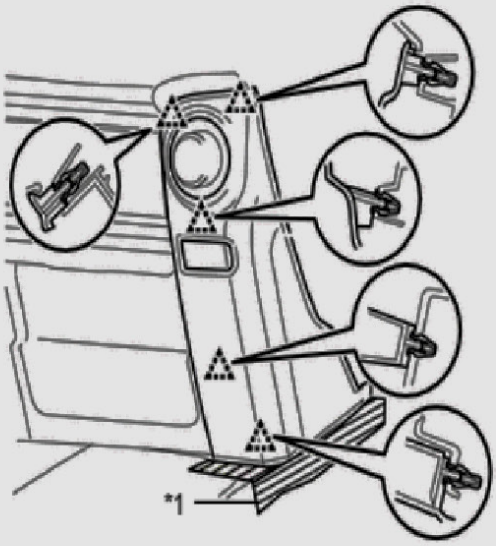



Remove the trim between the glove box and climate controls by grasping it firmly and pulling it to release the pop clips from the dash.

The Passenger Knee Airbag will need to be removed. Pop the cover off the left hand side to reveal two 10mm bolts. Remove the two bolts from the left side and then push the kick panel to the side slightly to remove one more 10mm bolt from below the right side. Pull the airbag assembly out from the dash using light pressure to release the pop clips.. Make sure the airbag is supported and do not allow it to hang from the electrical connector.

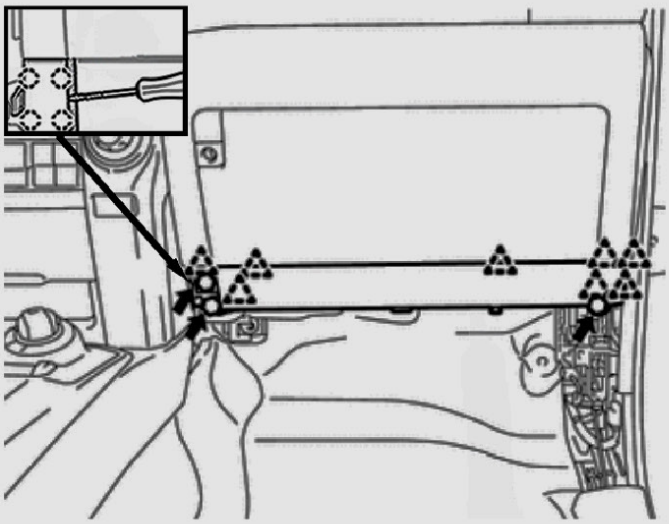

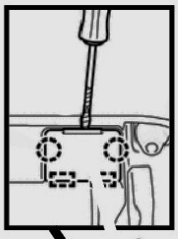

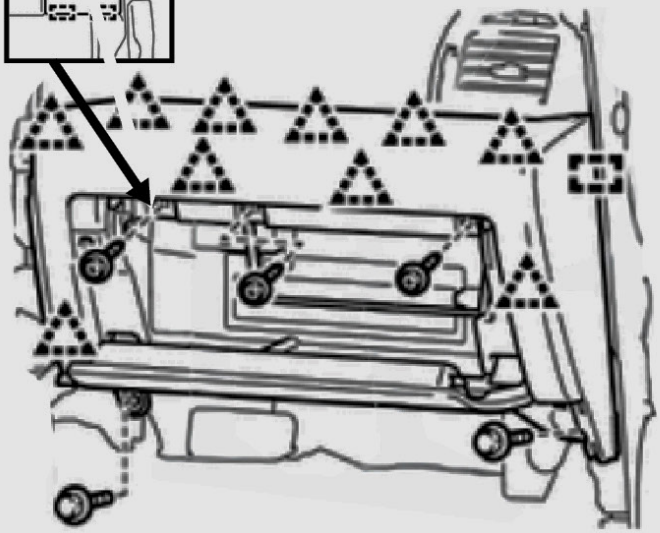

Open the glove compartment and pop open the covers over the three screws along the top edge of the glove compartment, then remove those 3 screws.

Close the glove compartment and remove a 10mm bolt from the bottom left and bottom right of the compartment.

Remove the entire assembly by popping it free of the pop clips holding it in place and position it aside.

Plug the TLX02 harness connector into the JS9 connector and the 4RUN20 harness into the 4RUN20 connector on the main harness and route both harnesses over to the passenger side of the vehicle.

Passenger Side Disassembly and Connections

Certification ECU Connection

The Certification ECU is behind a vent duct on the lower left side of the area behind the glove compartment.

Unplug the top and bottom connectors from the Certification ECU and plug them in to the Female connectors on the TLX02 harness, plug the Male connectors from the TLX02 harness back into the respective spots on the Certification ECU.

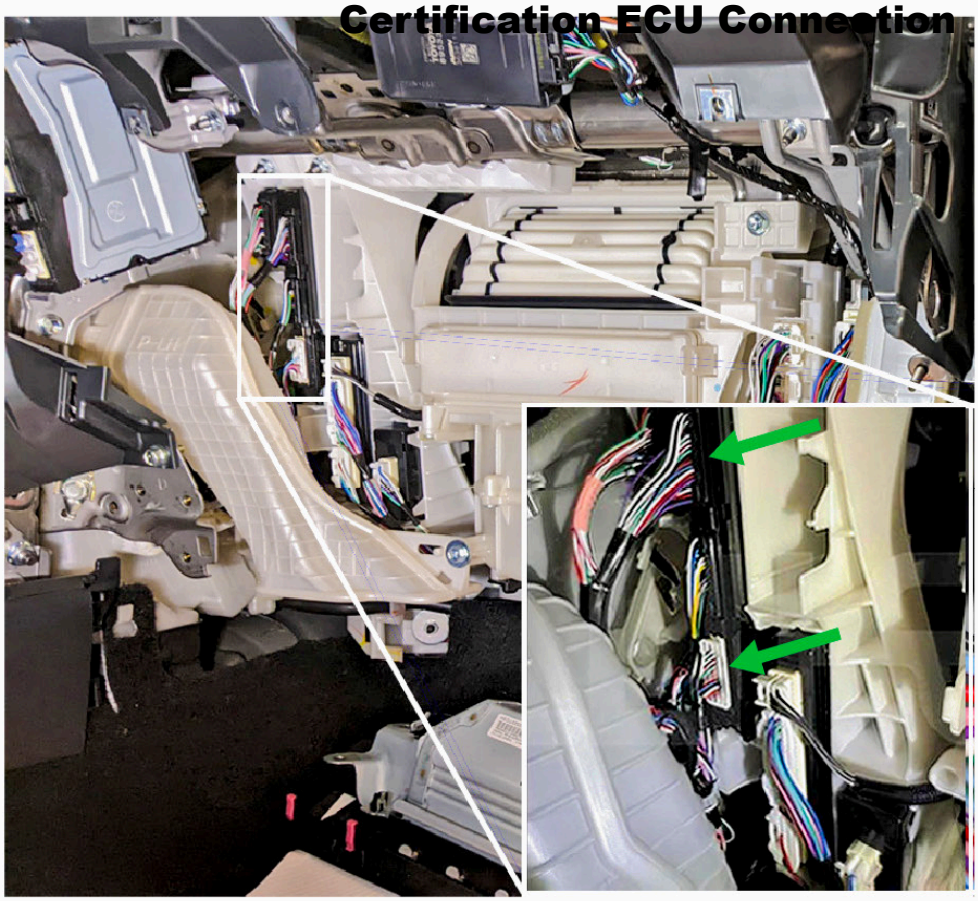

DCM Connection

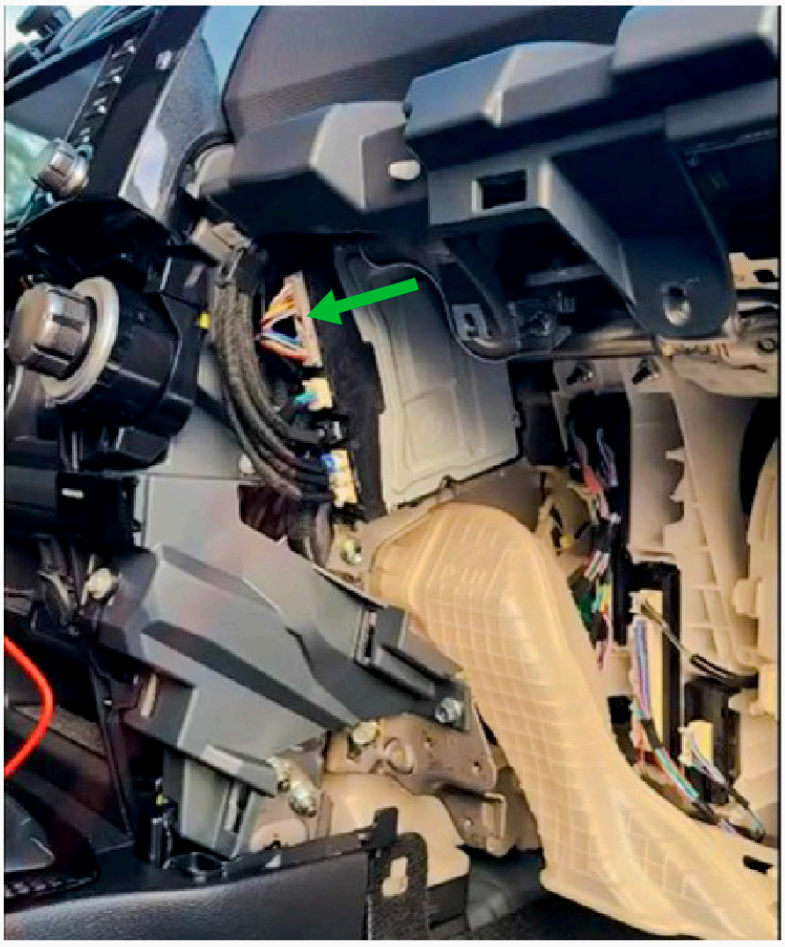

The Data Communications Module (DCM) is up higher near the radio in the cavity.

Unplug the 36 pin connector at the top of the DCM and plug it into the Female connector on the 4RUN20 harness, plug the Male connector from the 4RUN20 back into the DCM.

Secure the additional length from the harnesses somewhere it wont be in the way during reassembly or near moving parts in the dash.

2020-2021 Tundra & 2020-2022 Sequoia Wiring Overview

Wiring Diagram

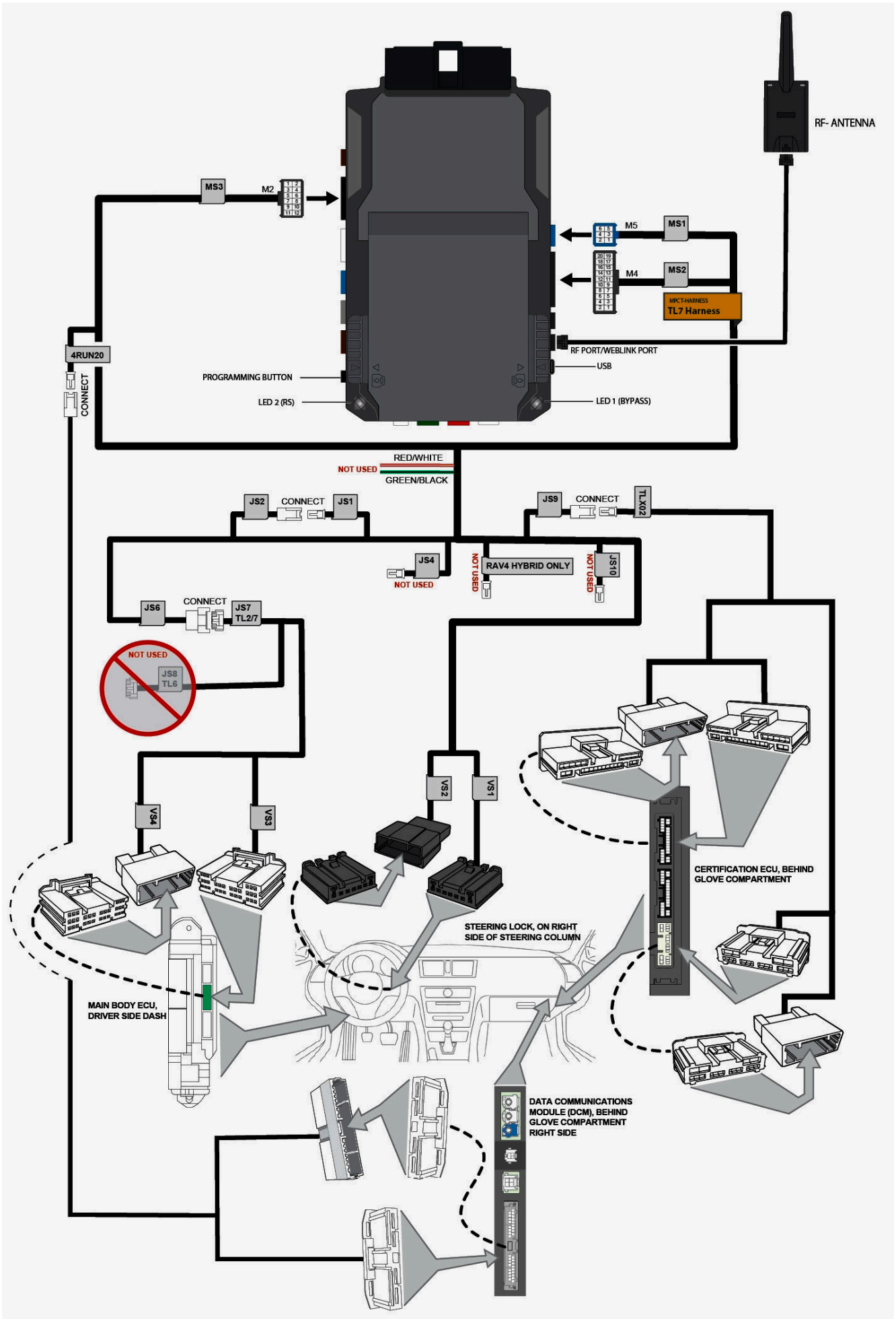

Disassembly and Accessing Connectors

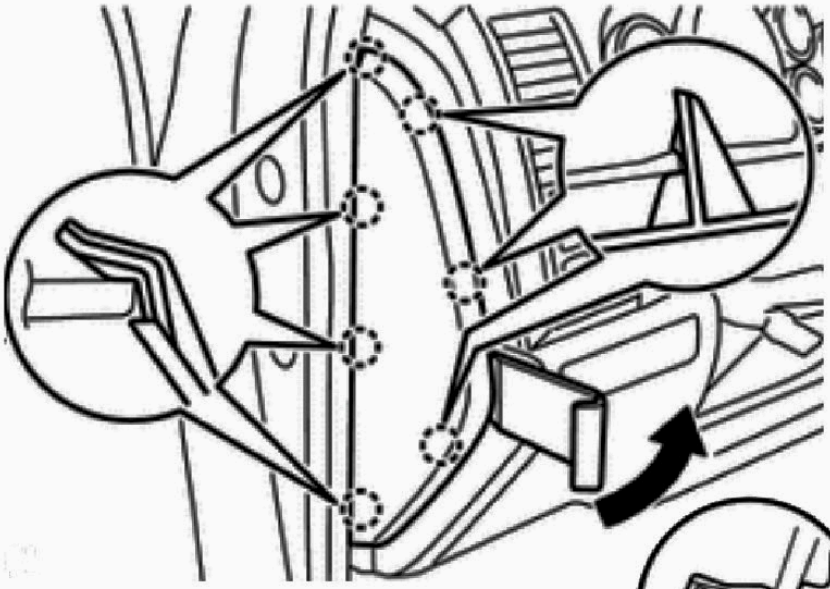

With the aid of a panel removal tool, remove the endcap trim.

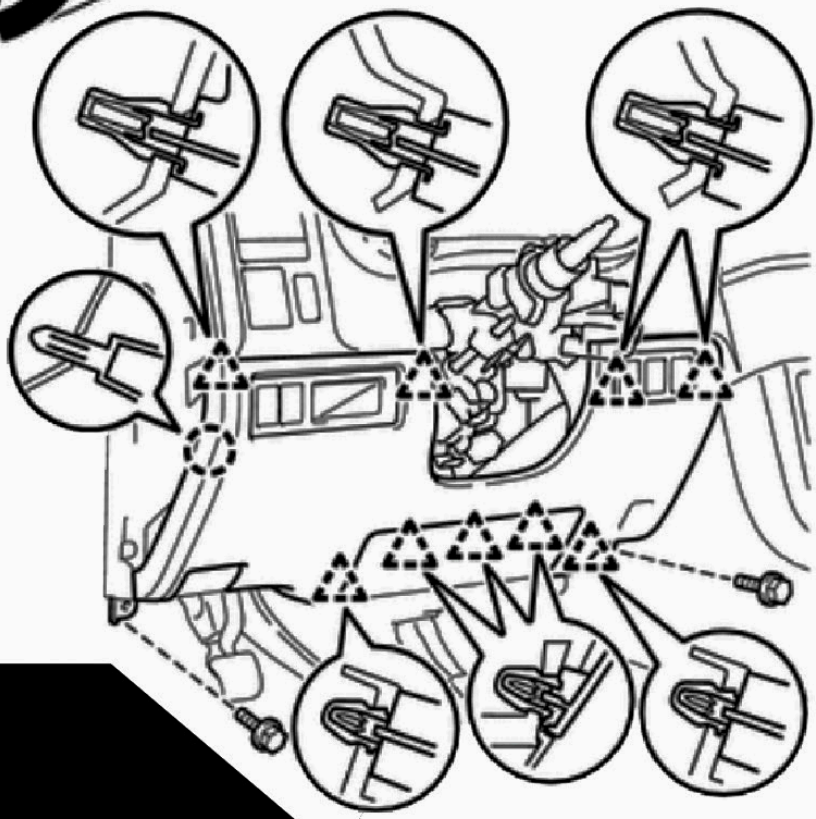

Remove two 10mm bollts from the panel in the lower left and right corners.

Work your way around the panel with the panel tool to release the guide tabs and pop clips to pull the panel away from the dash.

Unplug the connectors as needed and position the panel aside.

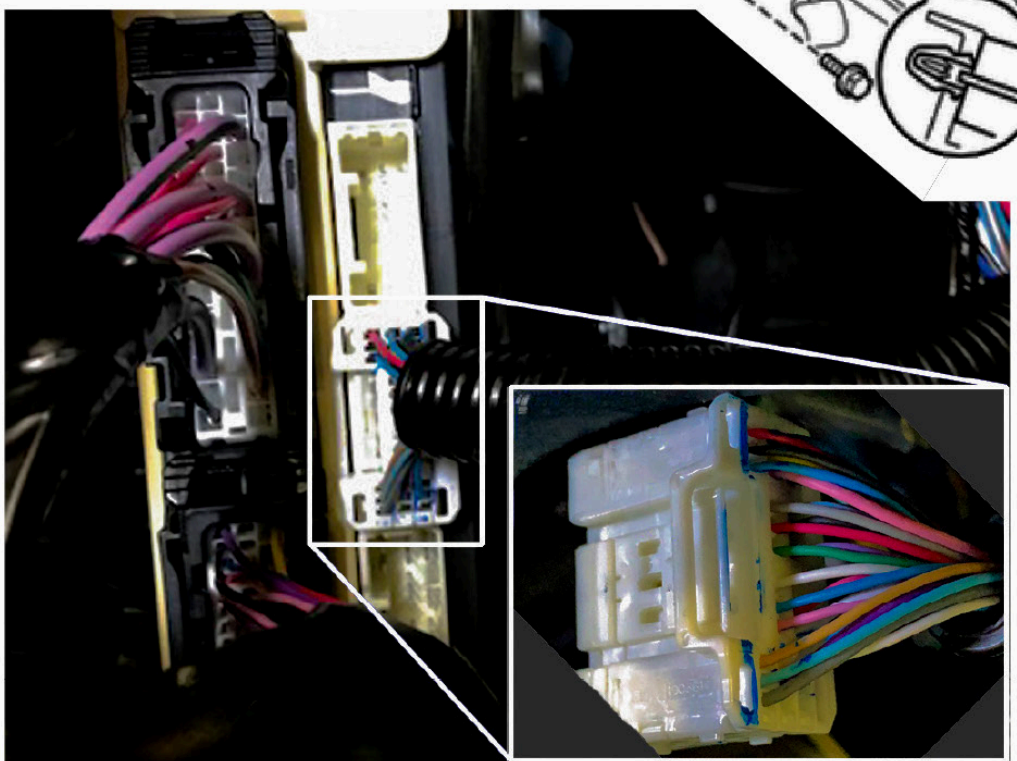

The Main Body ECU is attached to the side of the fuse box on the left side of the dash.

Unplug the middle Main Body ECU connector and plug it in to VS4 on the T harness, plug VS3 back into the spot on the BCM.

STEP 2.8: Tundra Cert ECU / DCM T-Harness Connection Pass Side

Passenger Side Disassembly and Connections

It is possible to reach the connectors from underneath the dash and removing the glove compartment is not required but will make them easier to access.

Remove the passenger end cap similar to how the drivers side was removed.

Remove the Insulator Panel from below the passenger side dash by squeezing the four claw tabs at the front of the panel, then popping the clip on the left hand side loose with downward pressure. Lower the panel and pull it away from the firewall.

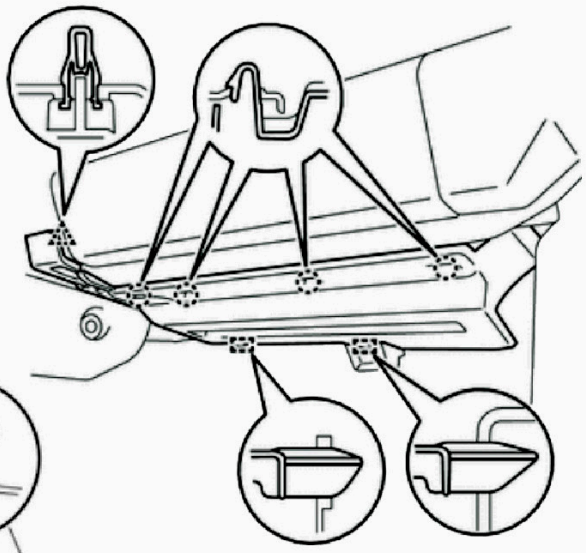

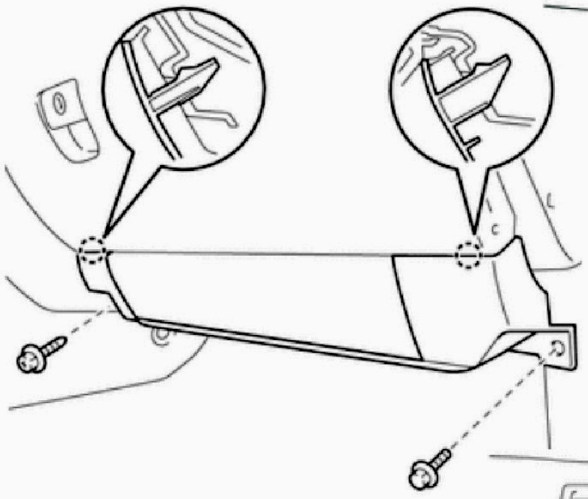

Push the kick panel aside slightly and remove a 10mm bolts from the lower right side of the trim around the passenger knee airbag, remove a screw from the lower left side.

Remove the trim with the aid of a panel removal tool.

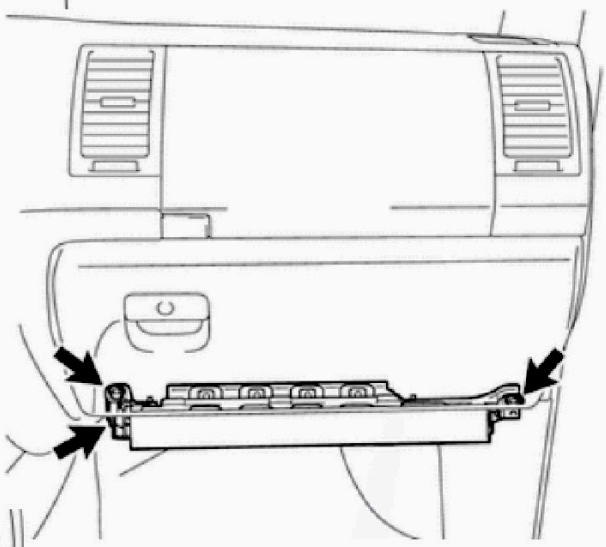

Remove two 10mm bolts from the left side of the Passenger Knee Airbag and one 10mm bolt from the right side. Pull the airbag assembly out from the dash.

Make sure the airbag is supported and do not allow it to hang from the electrical connector.

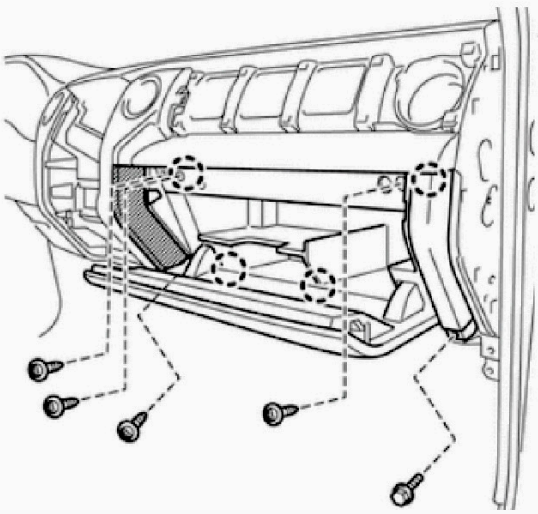

Remove a 10mm bolt from the bottom right corner of the glove compartment, one screw from the bottom left corner, and three more screws from the top edge inside the glove compartment.

Remove the entire assembly by popping it free of the pop clips holding it in place and position it aside.

Take care not to scratch the console trim along the left side while removing the compartment.

Plug the TLX02 harness connector into the JS9 connector and the 4RUN20 harness into the 4RUN20 connector on the main harness and route both harnesses over to the passenger side of the vehicle.

Passenger Side Disassembly and Connections

The Certification ECU and Data Communications Module (DCM) are held by the same bracket on the right side behind the glove compartment.

Unplug the top and bottom connectors from the Certification ECU (left) and plug them in to the Female connectors on the TLX02 harness, plug the Male connectors from the TLX02 harness back into the respective spots on the Certification ECU.

Unplug the 36 pin connector at the bottom of the DCM (right) and plug it into the Female connector on the 4RUN20 harness, plug the Male connector from the 4RUN20 back into the DCM.

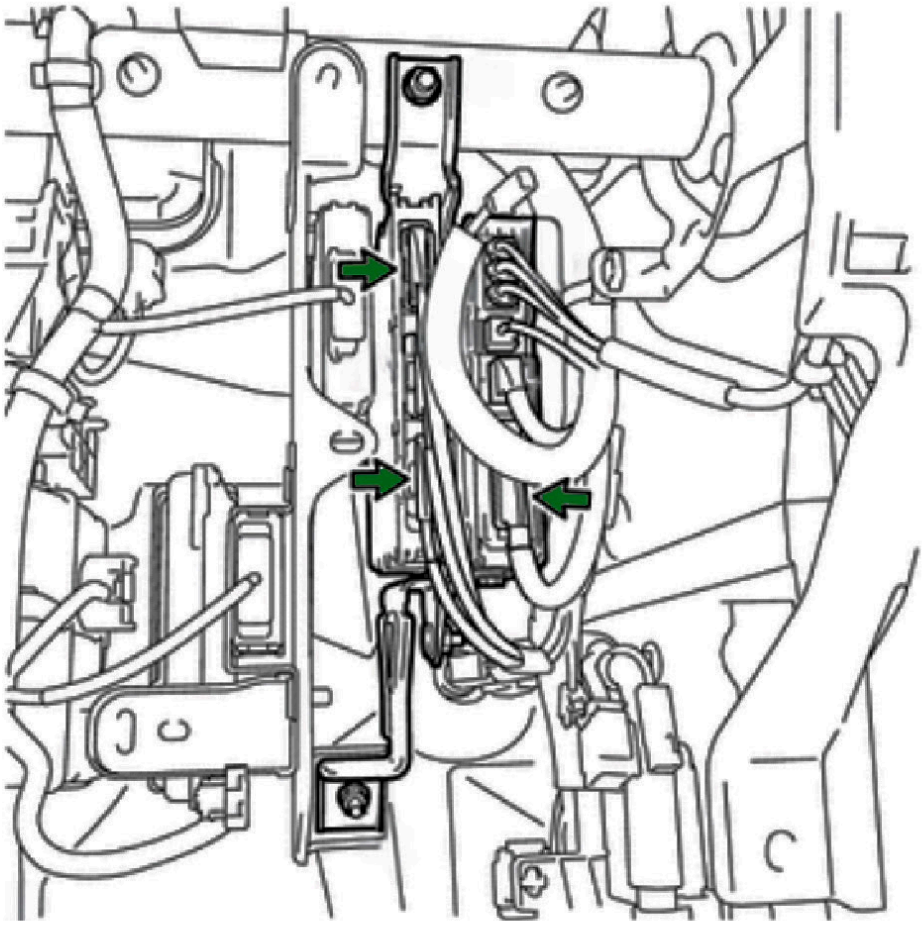

The Certification ECU and Data Communications Module (DCM) are both on the right side of the cavity behind the glove compartment. The DCM is a little higher up and further back into the dash with a slight downward angle.

Unplug the top and bottom connectors from the Certification ECU (right) and plug them in to the Female connectors on the TLX02 harness, plug the Male connectors from the TLX02 harness back into the respective spots on the Certification ECU.

Unplug the 36 pin connector at the bottom of the DCM (left) and plug it into the Female connector on the 4RUN20 harness, plug the Male connector from the 4RUN20 back into the DCM.

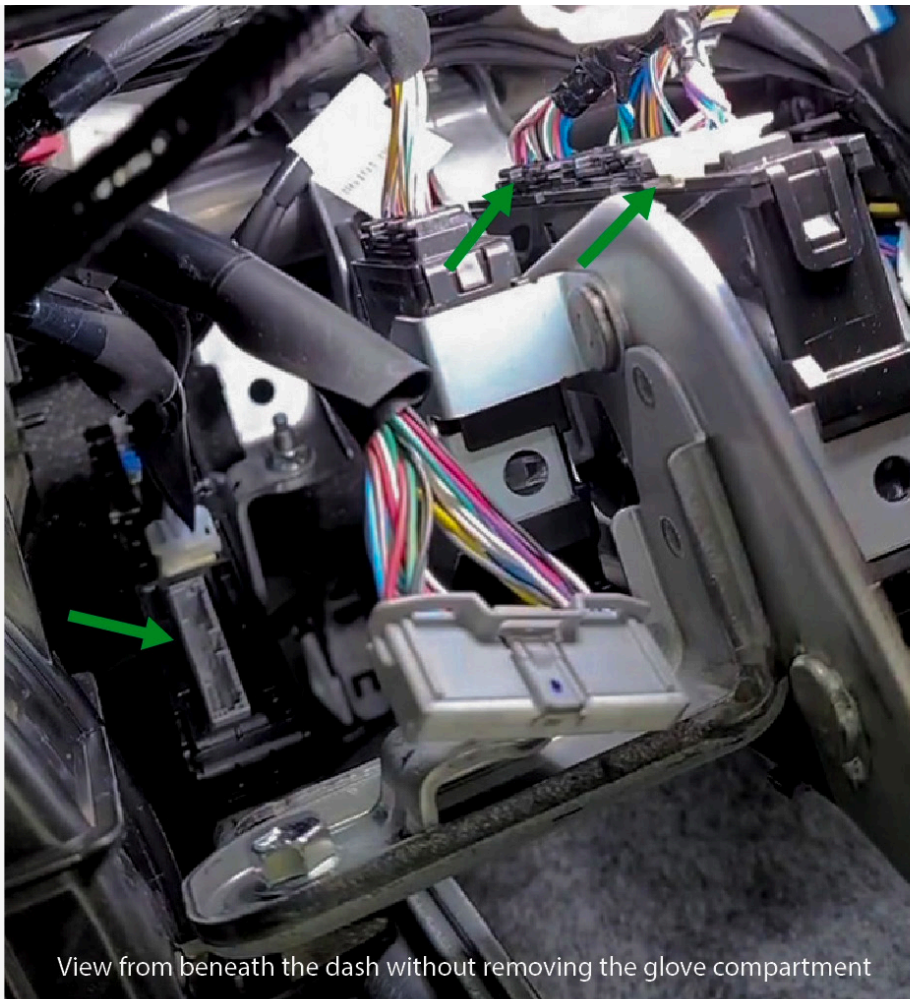

View from beneath the dash without removing the glove compartment

STEP 3: Programming for All Toyota Models

Your Remote Start module now needs to be paired to your vehicle. Before starting the programming sequence, make sure that all of the connectors are plugged into the module. Instructions for programming the Remote Start are below. Follow the programming instructions for the LED1 and LED2 descriptions to monitor flashes.



Program the Remote Start Module

>> 
IMPORTANT: The hood must be closed.

01 

Push start button twice [2x] to ON position while watching LED 1.

LED 1

02 
Wait, if LED 1 turns solid GREEN for 2 seconds, proceed to step 7. If LED 1 flashes GREEN rapidly, proceed to step 3.

03 

Push start button once [1x] to OFF position.

04 
Wait, LED 1 will turn solid RED. (This may take up to 5 minutes.)

05 

Push start button twice [2x] to ON position.

06 
Wait, LED 1 will turn solid GREEN for 2 seconds.

07 

Push start button once [1x] to OFF position.

08 

START vehicle for and allow it to idle for about 15 seconds.

09 
Press and hold the brake pedal.

10 
Press and release the module's programming button.
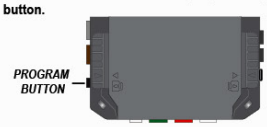

11 
Release the brake pedal.

12 
Wait, LED 2 will flash GREEN twice (2x) and then turn off.


13 
Module Programming Procedure completed.

STEP 4: Finishing up!

After confirming that everything works properly, cap off or tape the ends of any wires you're not using to avoid grounding or other contacts.

- Now gather up all the wiring and neatly bundle it together using zip ties or electrical tape to prevent the wires from interfering with any of the moving parts under the dash.
- Test the system often when you are putting your vehicle back together.
- Find a secure place to put the remote start module and use zip ties to secure it. Be careful not to zip tie near your connections as it may create a bad connection.
- Replace any interior vehicle panels that were removed to gain access to the needed wires, in reverse order that they were removed.
- Test the system as you reinstall the panels in your vehicle to make sure you do not pull something loose or pinch a wire. Be careful not to run a screw through a wire or pinch a wire while reinstalling panels.

* If your test was unsuccessful, go back and re-check your wiring and programming. If you used T-Taps, make sure they are all attached correctly. Poorly made T-Tap connections are the #1 cause for tech support calls. Also, remember that T-Taps should never be used on data connections.

VEHICLE TAKE OVER PROCEDURE

This system will run for 15 minutes then turn off. If you approach the vehicle while it is still running, unlock the doors, enter the vehicle and close the door, within 45 seconds, press the brake pedal and hold it down for 3 seconds, you will hear a click from the remote starter turning off and you can drive away. Older model Toyotas turn off when you open the door, these models will require that you restart normally when you enter.

01 

All vehicle doors must be closed and locked prior to remote start sequence.

02 

Press the Lock button 3 times on the vehicles OEM factory remote.

03 

The vehicle engine will start.

04 

Press unlock on the OEM remote or request switch.

Enter the vehicle with the OEM keyfob and close the door.

05 

Time rescriction. Complete Step 6 within 45 seconds of unlocking the vehicle.

06 

Press the BRAKE pedal for about 3 seconds and release.

07 

The vehicle can now be put in to gear and driven..

>> 

failure to follow procedure will result in no take over and vehicle engine will shutdown.

If you have any installation questions or problems,
you can create a support ticket for help at:
install.kleinn.com/support

Kleinn Automotive Accessories
520-579-1531

Copyright 2026 Kleinn Automotive Accessories

Troubleshooting Charts

When the system receives an activation command and you hear clicks from the HCX remote start module brain but the vehicle fails to start, Parking lights flash and HCX brain will click 3x times followed by a number of flashes and clicks for the diagnostics code. The second number of flashes/clicks corresponds to a remote start diagnostic error code. This will tell you why the remote starter is failing to start. The codes are as follows:

REMOTE STARTER ERROR CODES: NOTES	PARKING LIGHT FLASHES	DIAGNOSTIC
I WARNING: The following applies only when the parking lights are connected and supported by the system. II After a remote starter failure, the parking lights will flash three [3x] times followed by the error code. See table.	3 + 1	Tach is not programmed OR engine is already running.
	3 + 2	Key is in ignition ON position.
	3 + 3	Door is open.
	3 + 4	Trunk is open.
	3 + 5	Foot brake is ON.
	3 + 6	Hood is open.
	3 + 7	Loop is not cut.
	3 + 8	Vehicle failed to remote start.
	3 + 9	Vehicle movement detected (VSS).
	3 + 10	System is in Valet Mode.
	3 + 11	CAN communication failure
	3 + 12	RS not synchronized. Start vehicle with OEM key for 15 sec before trying a new RS sequence.
	3 + 13	Bypass problem.
	3 + 14	Idle mode or takeover is not available on this vehicle.
	3 + 15	Overheat protection.

REMOTE STARTER SHUTDOWN ERROR CODES: NOTES	PARKING LIGHT FLASHES	DIAGNOSTIC
I WARNING: The following applies only when the parking lights are connected and supported by the system. II If the engine shuts down after a remote starter sequence use the query command from a compatible aftermarket remote to display the shutdown error code. The parking lights will flash four [4x] times followed by the error code. See table.	4 + 1	Engine tach signal was lost.
	4 + 2	Emergency brake signal was lost.
	4 + 3	Foot brake ON detected.
	4 + 4	Hood open detected.
	4 + 5	Tach over rev detected.
	4 + 6	Glow plug timeout error.
	4 + 7	Vehicle movement detected (VSS).
	4 + 8	Check engine light ON.
	4 + 9	Low fuel level.
	4 + 10	Open door detected.
	4 + 11	CAN communication failure during RS sequence.
	4 + 12	RS not synchronized. Start vehicle with OEM key for 15 sec before trying a new RS sequence.
	4 + 13	Bypass problem.
	4 + 14	Idle mode or takeover is not available on this vehicle.
	4 + 15	Overheat protection.

MODULE STATUS DURING:	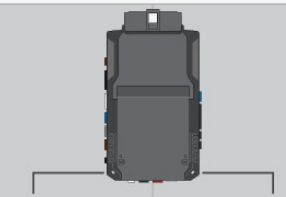 LED 2*	LED 1**	LED STATUS	DIAGNOSTIC
REMOTE START SEQUENCE	●		Flashing rapid RED	Remote start shutdown sequence.
	●		Flashing slow RED	Remote start shutdown error code. Contact technical support.
	●		Solid RED	Remote start crank delay.
	●		Flashing rapid GREEN	Remote start cycle in progress. Working correctly.
	●		1 GREEN flash	Remote start initiated successfully.
	●		3 GREEN flashes	Idle mode cycle in progress.
	●		4 GREEN flashes	Turbo mode cycle in progress.
		●	Flashing GREEN	Remote start cycle in progress. Displays vehicle platform during runtime.
		●	Rapid GREEN flashing	Secure takeover initiated. Waiting to complete takeover after brake press.
TRANSMITTER PROGRAMMING	●		Solid RED	Remote programming in progress, waiting for remote pairing.
	●		1 GREEN flash	Remote programmed.
	●		4 RED flashes	Shutdown remote starter before attempting remote programming.
	●		5 RED flashes	Engine must be off before attempting remote programming.
	●		6 RED flashes	System must be unlocked/disarmed before attempting remote programming.
	●		7 RED flashes	Module must be learned to the vehicle before attempting remote programming.

* LED 2 (RS) displays generic diagnostic codes specific to the remote start module. Orange LED flashes may appear red.
** LED 1 (Bypass) displays diagnostic codes specific to the firmware loaded on the module.
Visit the programming diagnostics page for more information.