Installation Guide

Select 2012-2019 Toyota / Lexus Push to Start RAV4 & Select Cars

KLEINN SKU # - RSTOY6A

Years	Toyota (Push-to-Start With Take Over)								
2013-2018	Avalon		13	14	15	16	17	18	
2012-2017	Camry	12	13	14	15	16	17		
2014-2019	Corolla			14	15	16	17	18	19
2013-2018	Rav 4 (Gas)		13	14	15	16	17	18	
Years	Lexus (Push-to-Start With Take Over)								
2016-2018	Corolla					16	17	18	
2013-2018	ES350		13	14	15	16	17	18	

Compatible with automatic transmission vehicles manufactured for sale in the US and Canada Only

Introduction

Follow this guide closely as it covers multiple vehicles and the Cert ECU is in different locations based on the model.

- Pre-flashed Module: The correct firmware is installed on the remote start module. No programmer needed.
- Activation: Press the OEM lock button 3 times to remote start the vehicle.
- Wiring Overview Step 2
- Programming: After completing all connections, simply program the module to the vehicle in Step 3.
- Test the system Step 4
- Vehicle take over procedure Step 5

Remote Start Activation from OEM Transmitter:

Remote Starter Activation: Press Lock>Lock>Lock on your OEM remote to start the vehicle.

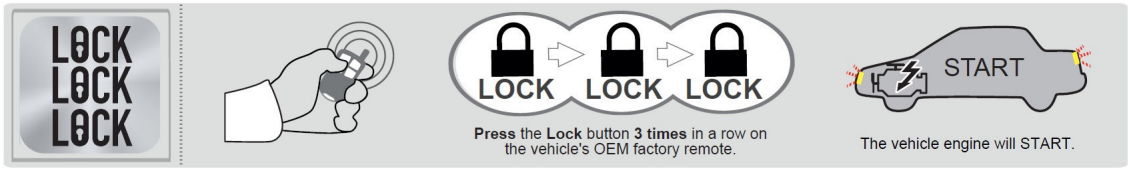

Check out our extended range RF Remote or Smartphone Control upgrade kits

Click Here for Upgrade Options

Parts Required:

- Idatalink HCX Module Pre-Flashed (RSA-TL6)-[1-13-1]
- T-Harness HCX-TL7-03

Disclaimer:

Neither the manufacturer nor the distributor of these components are responsible for damages of any kind either indirectly or directly caused by the components, except for the replacement of the components in case of manufacturing defects. This guide is subject to change without notice. Refresh your browser cache or use different browser (Edge, Chrome, Firefox, etc.) to view the latest update.

*** Firmware pre-loaded:** As part of the service Kleinn provides, we have already flashed the compatible firmware version and options into your **HCX** module for you so you are ready to begin the installation in the vehicle. You will need to program the module to the vehicle when the installation is complete.



Installation Overview

There are 5 basic steps to this remote start installation:

1. Preparation
2. Wiring
3. Programming
4. Testing the system
5. Finishing up!

STEP 1: Preparation

This remote start kit is a **PLUG & PLAY INSTALLATION TYPE** utilizing custom T-Harnesses which eliminate the "wire-to-wire" connections typically required. The physical attachment of t his product will require only plug-in connections. Simply plug the T-Harness into the vehicle, then program the module and the remote starter will be ready for use.

- Any vehicle panels required to gain access to the needed plugs outlined in this Tip Sheet will need to be removed. The bulk of the installation typically takes place in the driver's side under dash area. You may need to access the passenger side under dash area for some vehicles. Refer to the Wire Diagram for the locations that need to be accessed in the vehicle. Remember the order that you remove the panels.
- Wait to mount the remote start component(s) in the vehicle until after you have completed the wiring and have tested the system. Keep in mind where you plan to mount the component(s) when routing your wires to avoid having to unplug after programming. The component(s) can be mounted to a rigid wire bundle under the dash using zip ties. Look for an open and convenient location in the vehicle that will fit the component(s). Pay attention to moving parts like the pedals, e-brake and steering column. Be sure to route your wiring away from those areas. It is best to route your wires along with the vehicles factory wires, as this is typically a safe location and it keeps the install neat.
- If your T-harness has loose wires with no plugs at the end they will not be needed for standard installation in this application. Tape up any extra wires or tuck them away with the T-harness and isolate them so they are not in the way. Adding options may require additional wiring connections.

Accessing the connectors for the T-Harnesses:

- Set the parking brake and without pressing the foot brake press the push to start button twice to turn the ignition on.
- Turn the steering wheel to the right to access a screw and remove the screw.
- Turn the steering wheel to the left to access the screw on the other side and remove the screw. Use a plastic pry tool to separate the top and bottom half of the steering column cover.
- Pull the bottom cover down to separate the two halves. • Turn the ignition off by pressing the push to start button one time. The steering lock connector is now accessible at underside of the steering column.
- Remove the side dash panel and lower dash panel. It should be held on by a few clips.
- Once the side panel is off make sure there are not any screws holding the lower dash panel on. Most vehicles do not have any screws, the lower dash is secured by plastic clips. Gently pull the plastic panel and it will come unclipped.
- You will now see the ECU on the left side of the dash

Toyota / Lexus Connection Locations



Harness Preparation

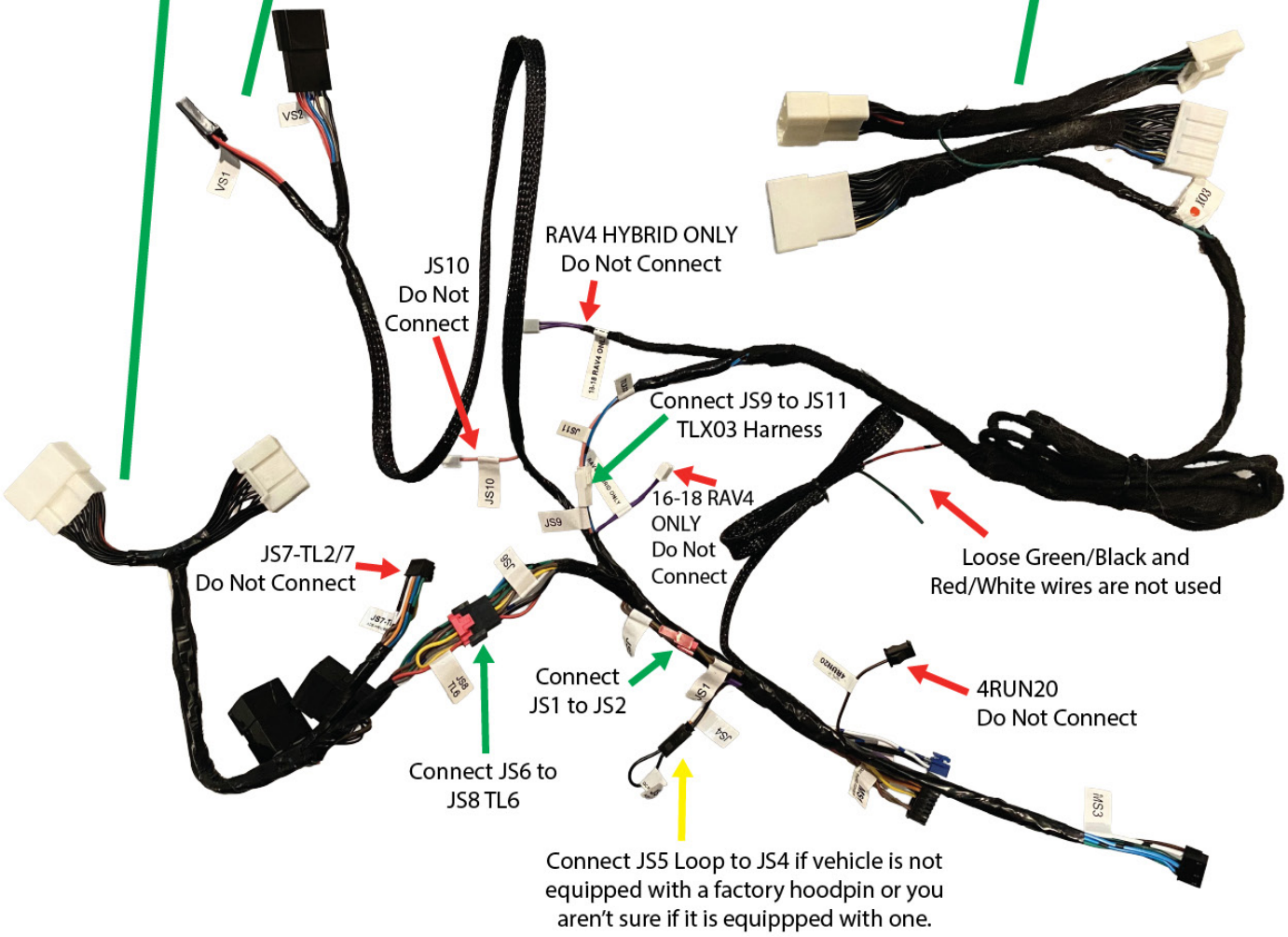

Make all harness connections to the vehicle prior to plugging the harness into the remote start module.

Toyota Steering Lock Connector Overview

Remove the lower steering column cover to access the Steering Lock connector.

Rotate the wheel about 45 degrees to the left to access a phillips head screw behind the steering wheel, remove the screw then rotate the wheel back the other way to access the other screw.

Press in on the edges of the lower column cover to release the hooks from the upper cover. Reach into the opening for the tilt lever and spread the claw to release it, then remove the lower column cover.



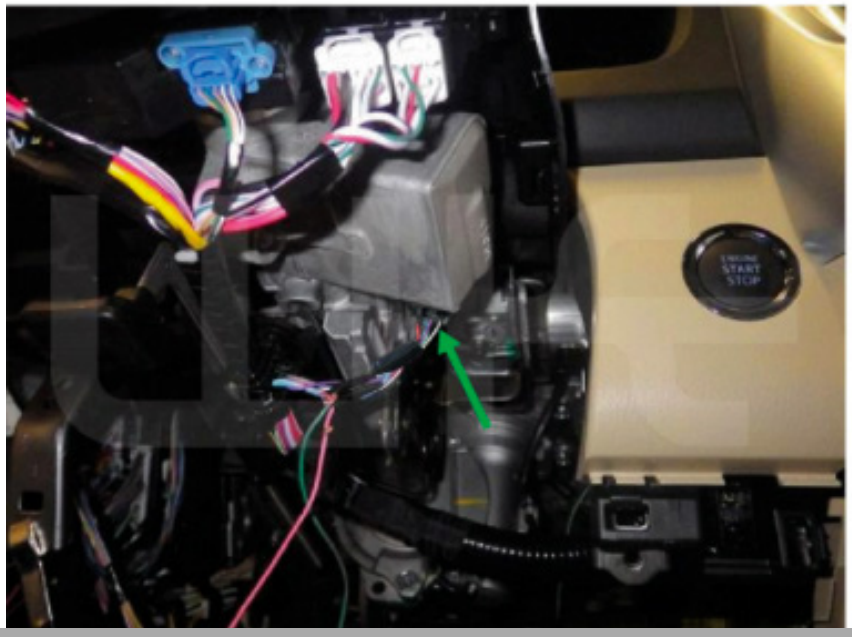

The Steering Lock Module is on the right side of the steering column about 6 inches back from the steering wheel.

Unplug the 7 pin connector from the back side of the steering lock module and plug it into VS2 on the T harness, plug VS1 back into the Steering Lock Module.

Take care to secure the harness and route the wires away from moving parts in the steering column.

Lexus Steering Lock Connector Overview

Remove the lower steering column cover to access the Steering Lock connector.

Rotate the wheel about 45 degrees to the left to access a phillips head screw behind the steering wheel, remove the screw then rotate the wheel back the other way to access the other screw. If your vehicle has a power tilt steering column, remove a 3rd screw from underneath the shroud cover.

Press in on the edges of the lower column cover to release the hooks from the upper cover. If your vehicle has a manual tilt steering column, reach into the opening for the tilt lever and spread the claw to release it, then remove the lower column cover.

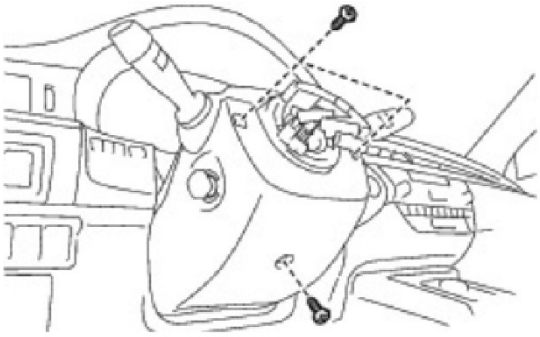

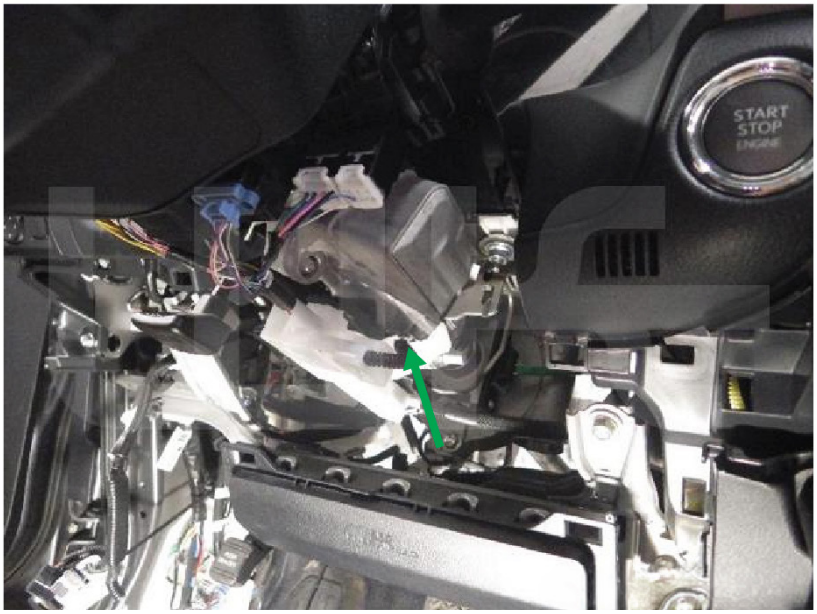

The Steering Lock Module is on the right side of the steering column about 6 inches back from the steering wheel.

Unplug the 7 pin connector from the back side of the steering lock module and plug it into VS2 on the T harness, plug VS1 back into the Steering Lock Module.

Take care to secure the harness and route the wires away from moving parts in the steering column.

Toyota Camry Connection Locations

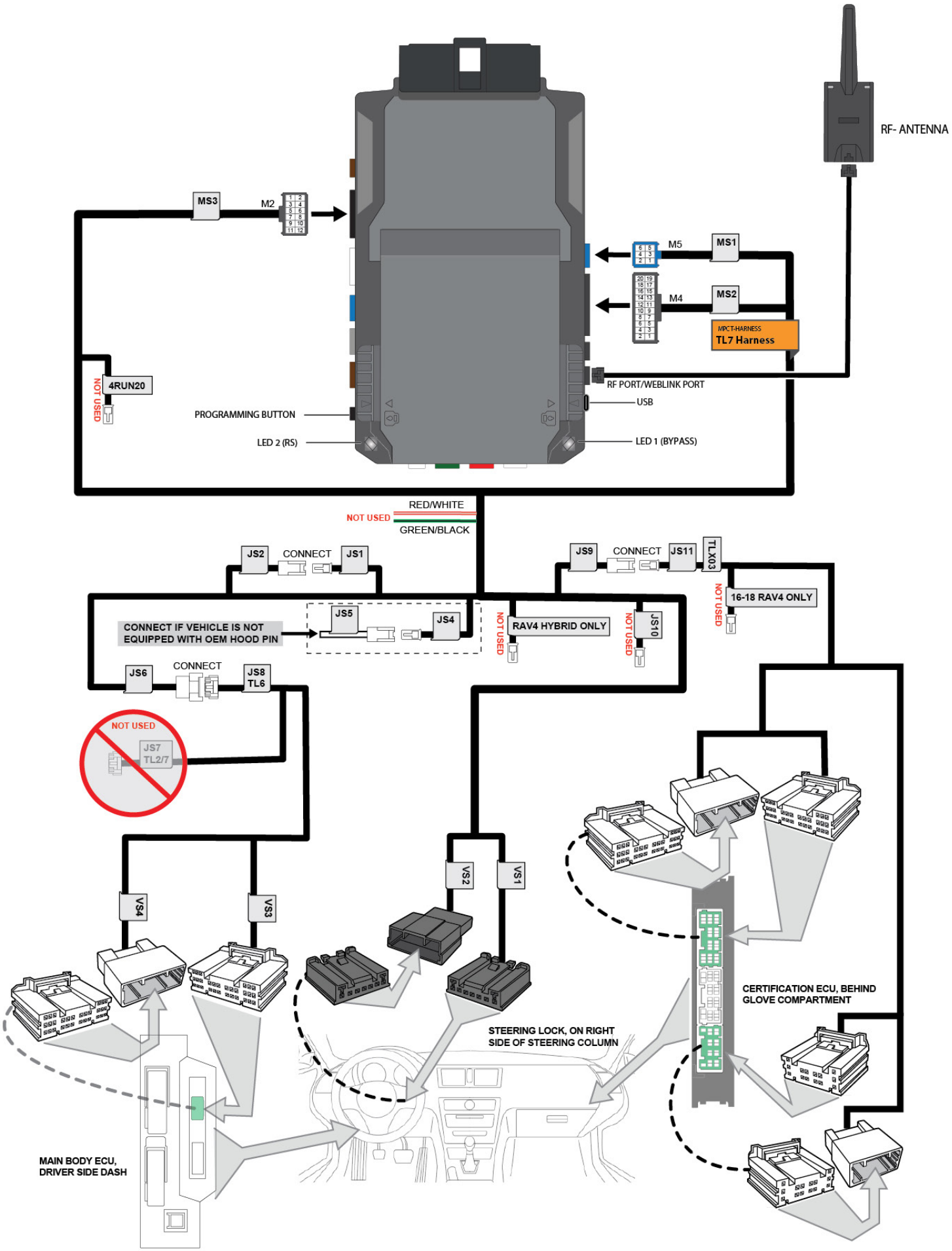

Disassembly and Accessing Connectors

Remove the Endcap panel from the left side of the dash by popping free the clips with the aid of a panel removal tool.

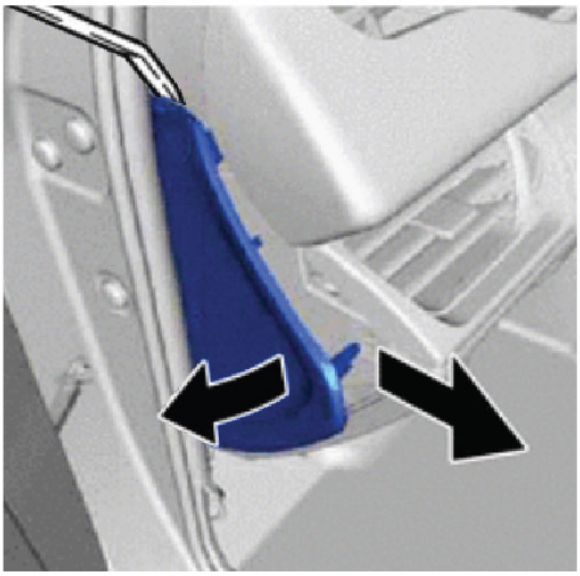

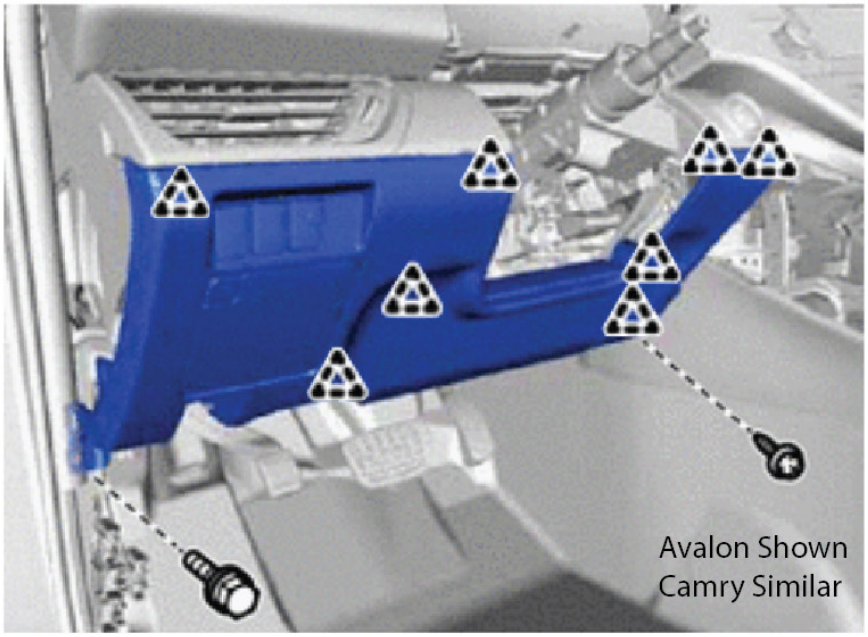

Push the top of the kick panel aside slightly and remove a10mm bolt from the bottom left corner of the panel. Remove a screw from the bottom right corner of the panel. Then With the aid of a panel removal tool, grasp the top right side of the panel in the steering column opening and pop the panel free from the dash. Remove electrical connectors from the panel as needed.

The Main Body ECU is attached to the side of the fuse box on the left side of the dash.

Unplug the middle Main Body ECU connector and plug it in to VS4 on the T harness, plug VS3 back into the spot on the BCM.

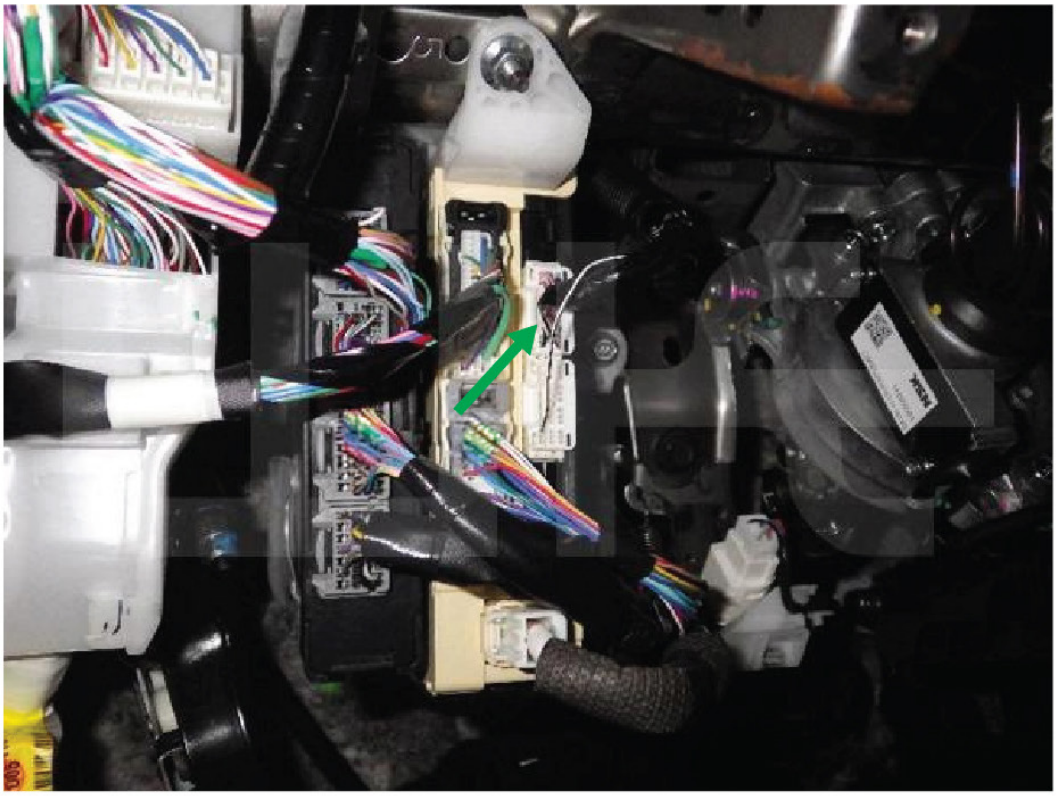

Toyota Camry TLX03 Certification ECU Passenger SIde for Take-Over

To allow for Takeover after remote starting the vehicle rather than having the vehicle shut down when a door is opened, the TLX03 connector must be plugged into the Certification ECU behind the Glove Compartment.

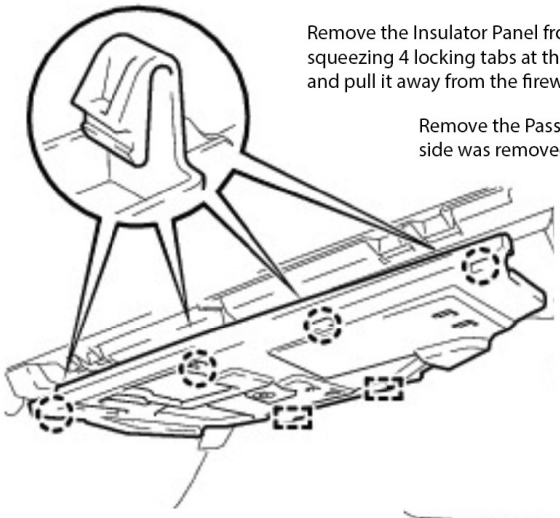

Remove the Insulator Panel from below the passenger side dash by squeezing 4 locking tabs at the front of the panel, then lower the panel and pull it away from the firewall.

Remove the Passenger End Cap similar to how the drivers side was removed.

You can attempt to reach the Certification ECU from underneath without removing the glove compartment however access is very tight and it will likely need to be removed to reach the connectors.

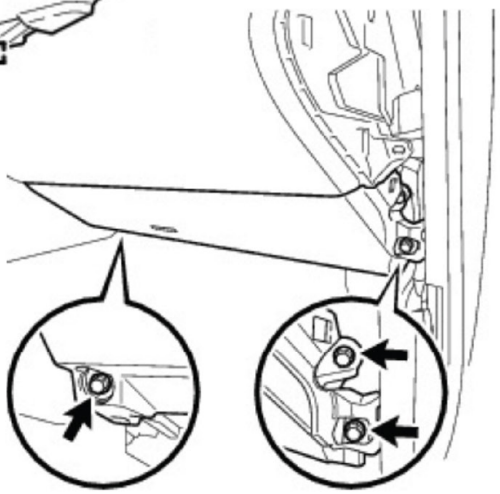

The Passenger Knee Airbag will need to be removed. Remove 1 bolt from the left side and 2 bolts from the right side then pull the airbag assembly out from the dash. Make sure the airbag is supported and do not allow it to hang from the electrical connector.

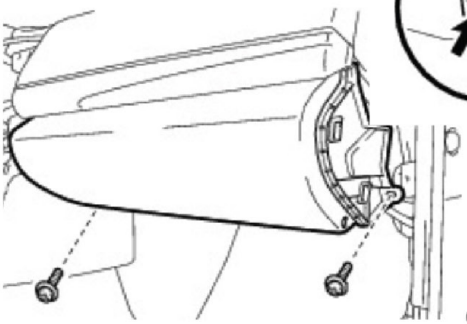

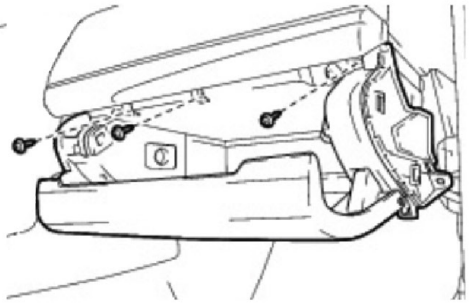

Remove a screw from both the bottom left and bottom right corners of the glove compartment assembly, then open the glove compartment and remove 3 more screws from the top edge of the glove compartment. Pull the entire glove compartment out to release it from the pop clips in the top corners.

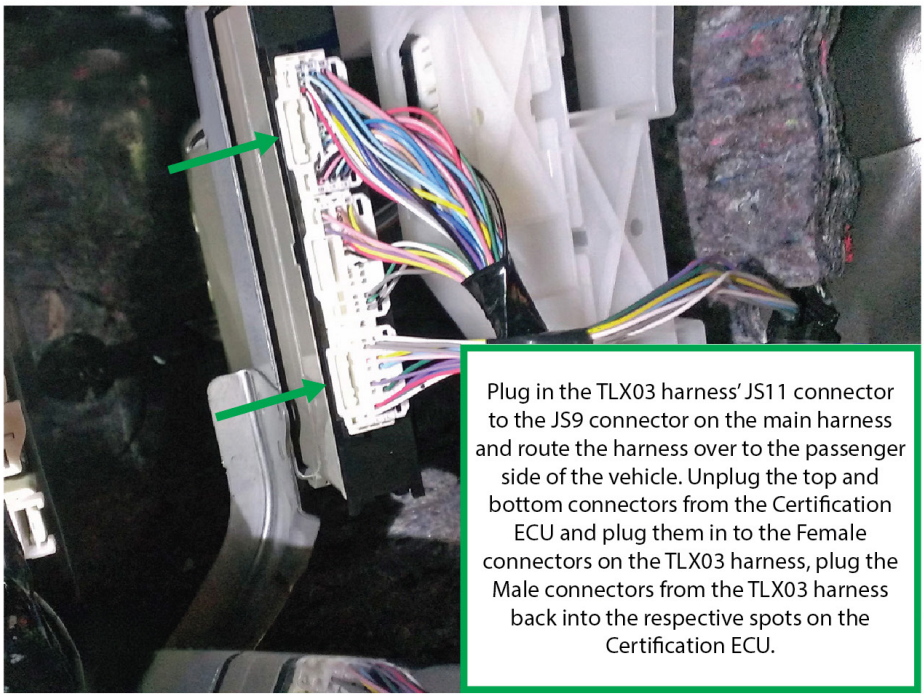

Plug in the TLX03 harness' JS11 connector to the JS9 connector on the main harness and route the harness over to the passenger side of the vehicle. Unplug the top and bottom connectors from the Certification ECU and plug them in to the Female connectors on the TLX03 harness, plug the Male connectors from the TLX03 harness back into the respective spots on the Certification ECU.

Toyota RAV4 Connection Locations

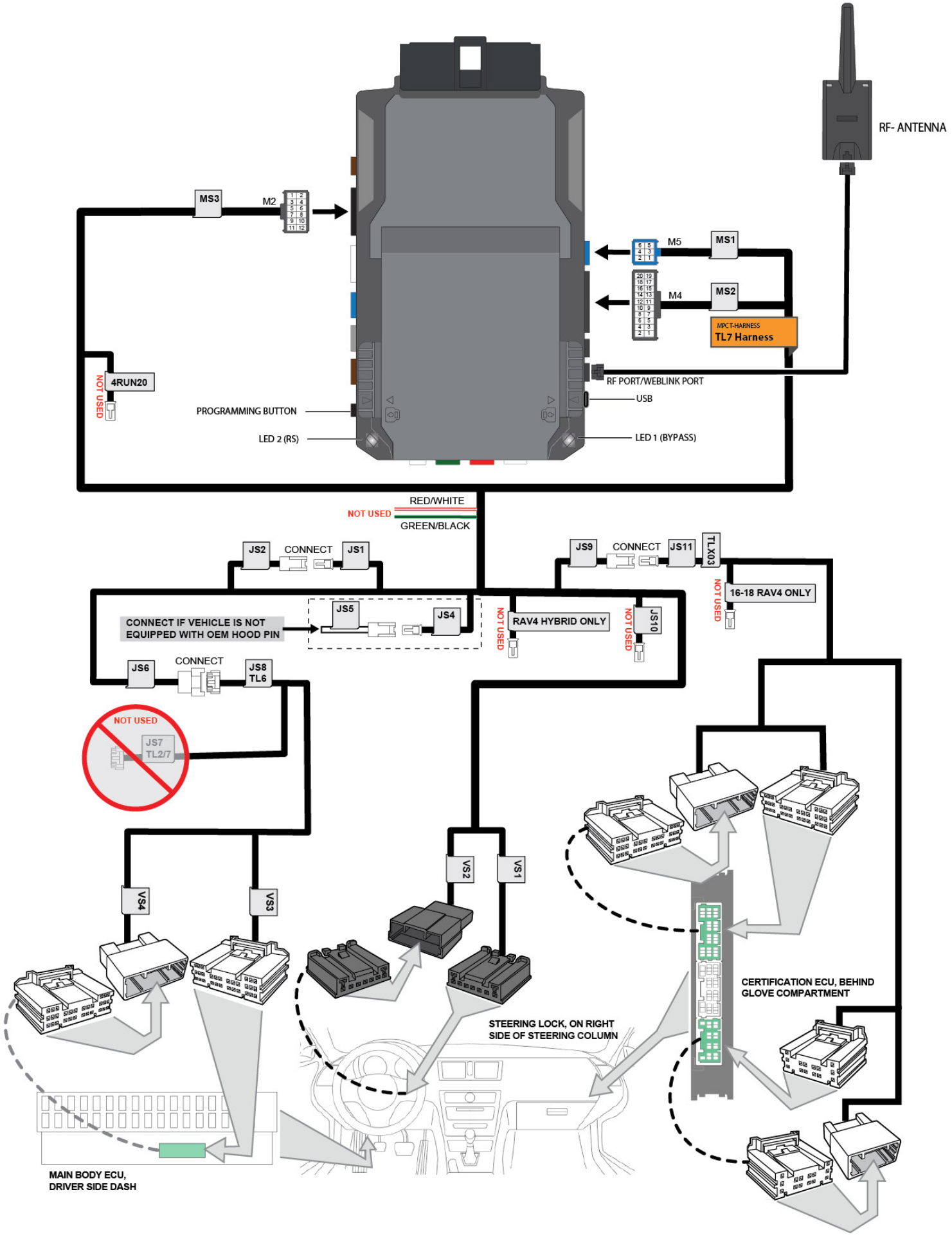

Disassembly and Accessing Connectors

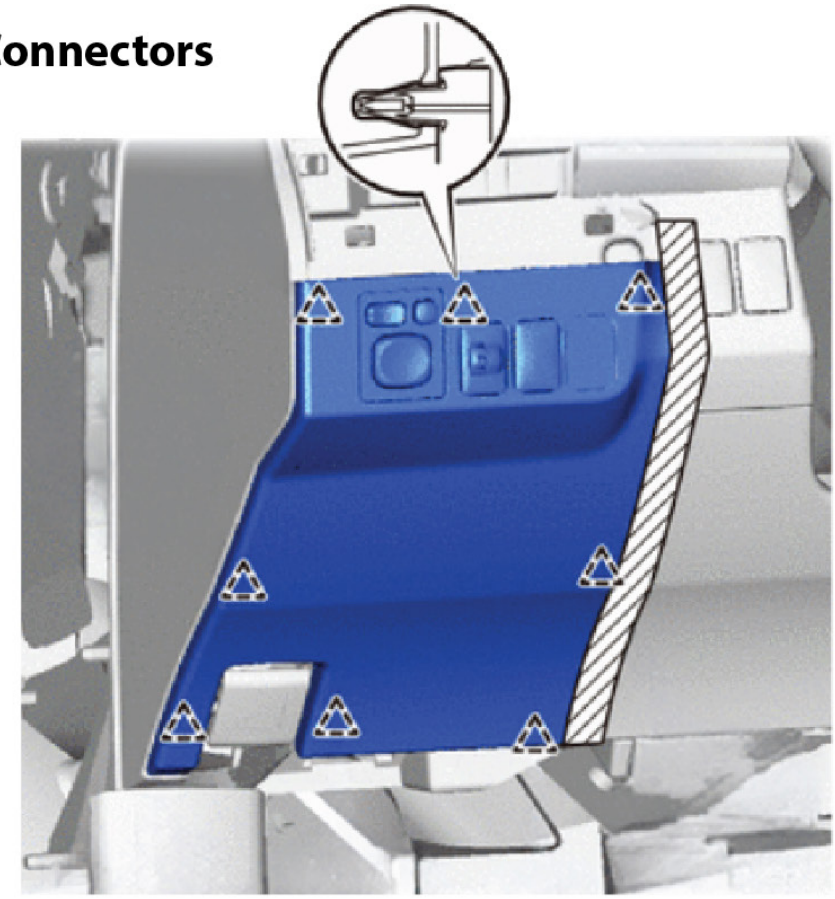

The connector needed is located directly behind/below the fuse panel under the drivers dash and can be accessed without any panel removal.

The panel in front of the fuse box is held in with pop clips and can be easily removed with the aid of a panel removal tool. It isn't required to do so but removing the panel may aid in mounting the HCX and routing wires. Take care along the right edge of the panel not to damage the airbag cover panel.



The Main Body ECU is attached to the side of the fuse box on the left side of the dash.

The plug exits downward and can be accessed from below the dash without any panel removal

Unplug the Main Body ECU connector and plug it in to VS4 on the T harness, plug VS3 back into the spot on the BCM.

TLX03 Connections for Takeover

To allow for Takeover after remote starting the vehicle rather than having the vehicle shut down when a door is opened, the TLX03 connector must be plugged into the Certification ECU behind the Glove Compartment.

Open the Glove Compartment and release the stopper from the right side by pulling it over the claw, then squeeze the back corners of the compartment inward so that it can be opened past its normal stopping point.

Continue opening the glove compartment until the door is near horizontal and then pull it up and outward off the claw hinges at the bottom to fully remove it.

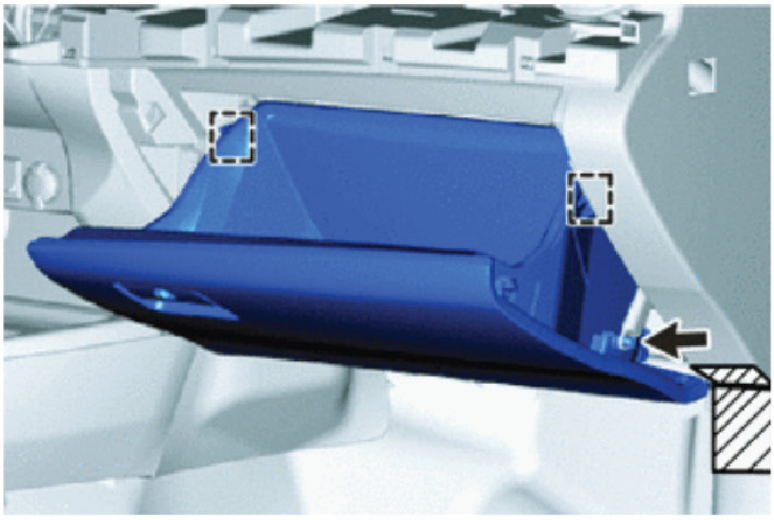



DO NOT CONNECT 16-18 RAV4 ONLY CONNECTOR ON TLX03 HARNESS

Plug in the TLX03 harness' JS11 connector to the JS9 connector on the main harness and route the harness over to the passenger side of the vehicle. Unplug the top and bottom connectors from the Certification ECU and plug them in to the Female connectors on the TLX03 harness, plug the Male connectors from the TLX03 harness back into the respective spots on the Certification ECU.

Toyota Corolla Connection Locations

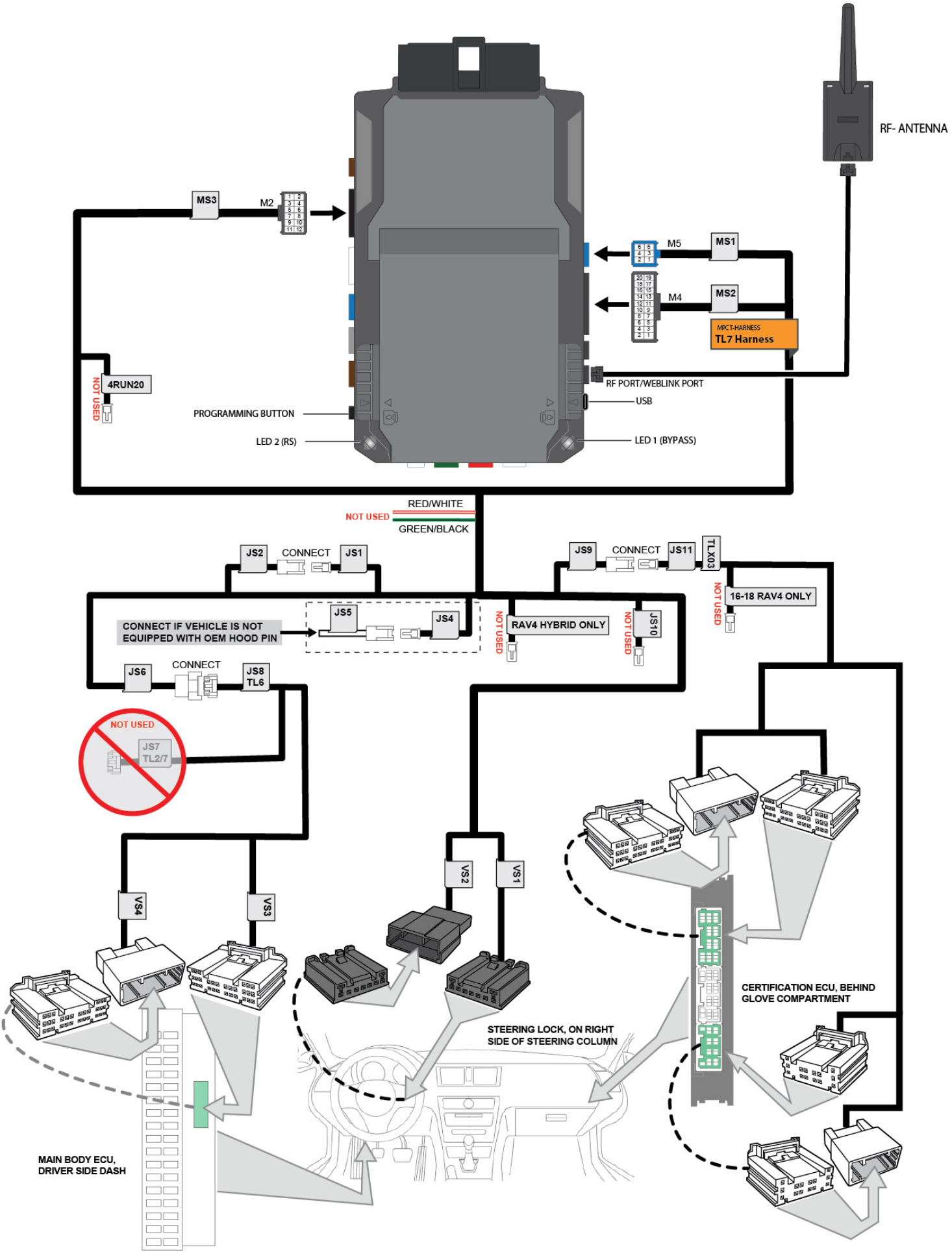

Disassembly and Accessing Connectors

The connector needed is located directly behind/below the fuse panel under the drivers dash and can be accessed without any panel removal.

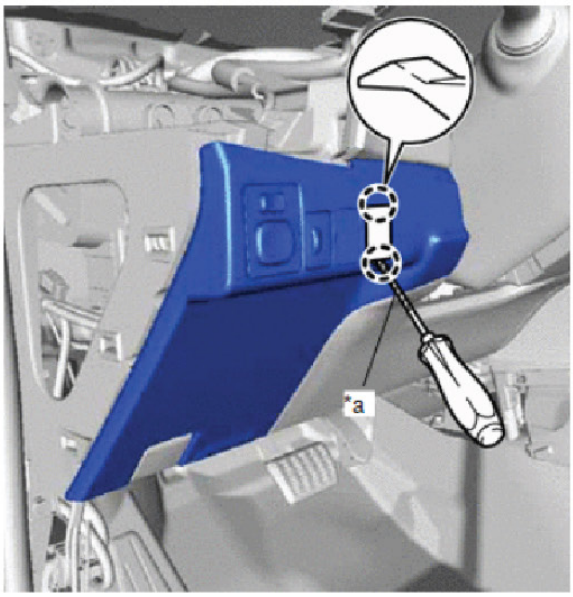

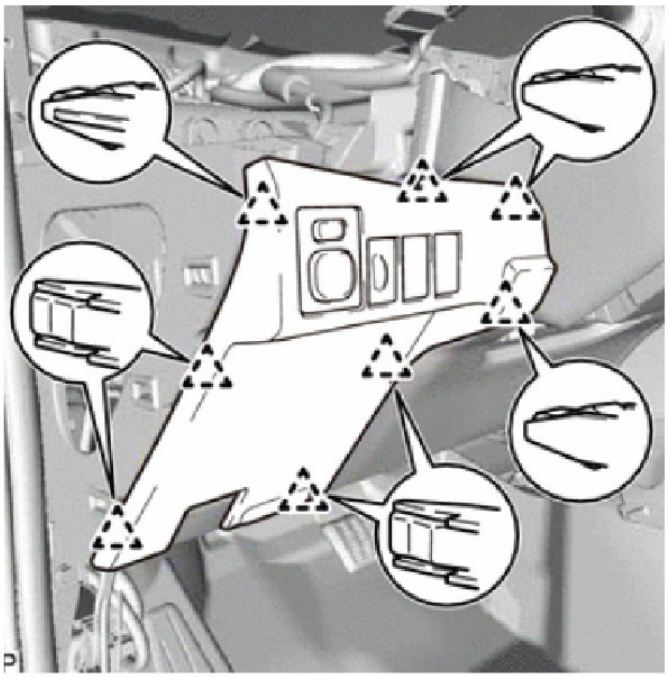

The panel in front of the fuse box can be removed relatively easily, it isn't required to do so but removing the panel may aid in mounting the HCX and routhing wires.

There is a hidden screw behind the right knockout, remove the knockout with a panel removal tool or other small flat tool and remove the screw behind it.

The panel is held in with 8 clips and can be popped free with the aid of a panel removal tool.

The Main Body ECU is attached to the side of the fuse box on the left side of the dash.

The plug exits downward and can be accessed from below the dash without any panel removal

Unplug the Main Body ECU connector and plug it in to VS4 on the T harness, plug VS3 back into the spot on the BCM.

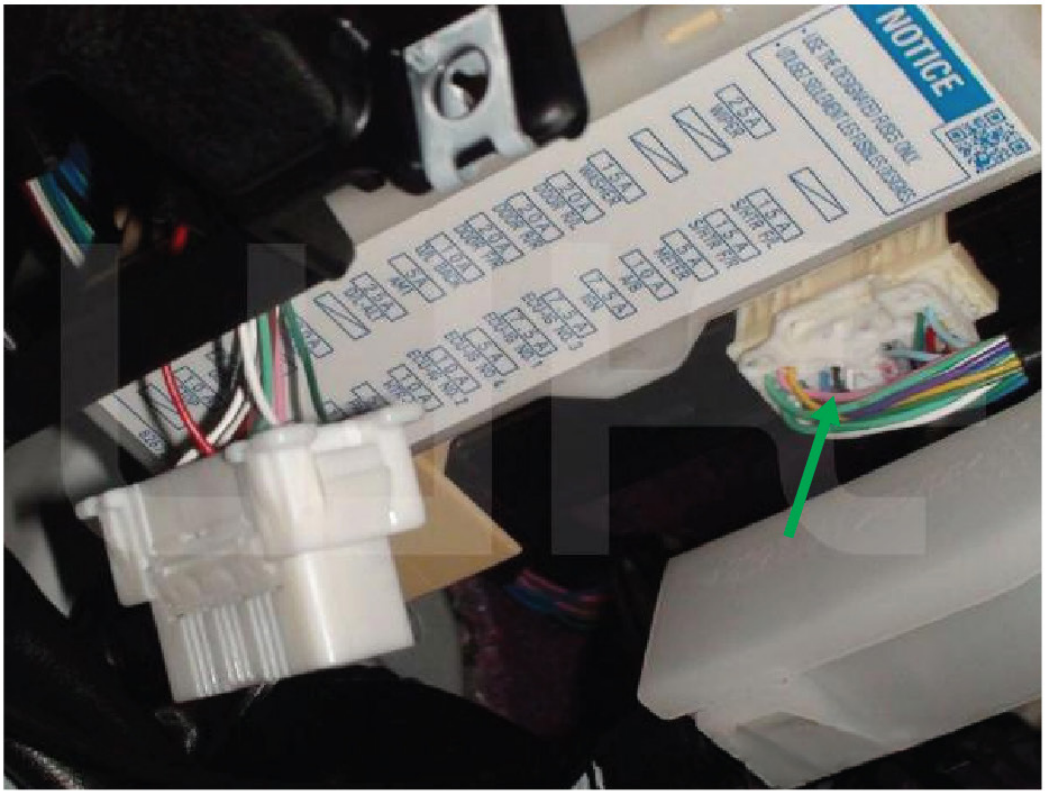

Toyota Corolla TLX03 Certification ECU Passenger Side for Take-Over

To allow for Takeover after remote starting the vehicle rather than having the vehicle shut down when a door is opened, the TLX03 connector must be plugged into the Certification ECU behind the Glove Compartment.

Open the Glove Compartment and release the stopper from the right side by pulling it over the claw, then squeeze the back corners of the compartment inward so that it can be opened past its normal stopping point.

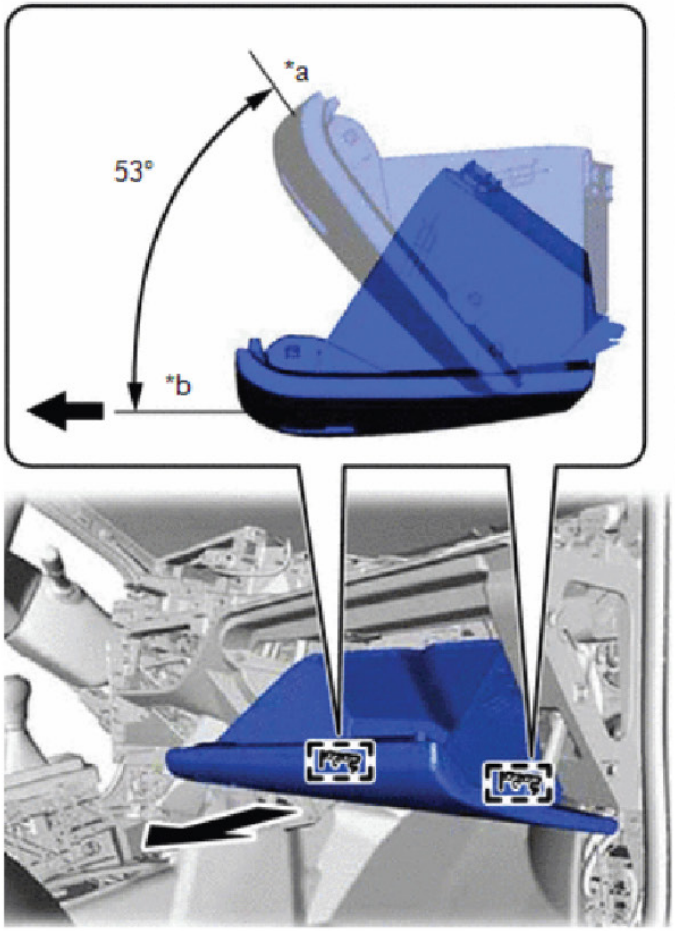

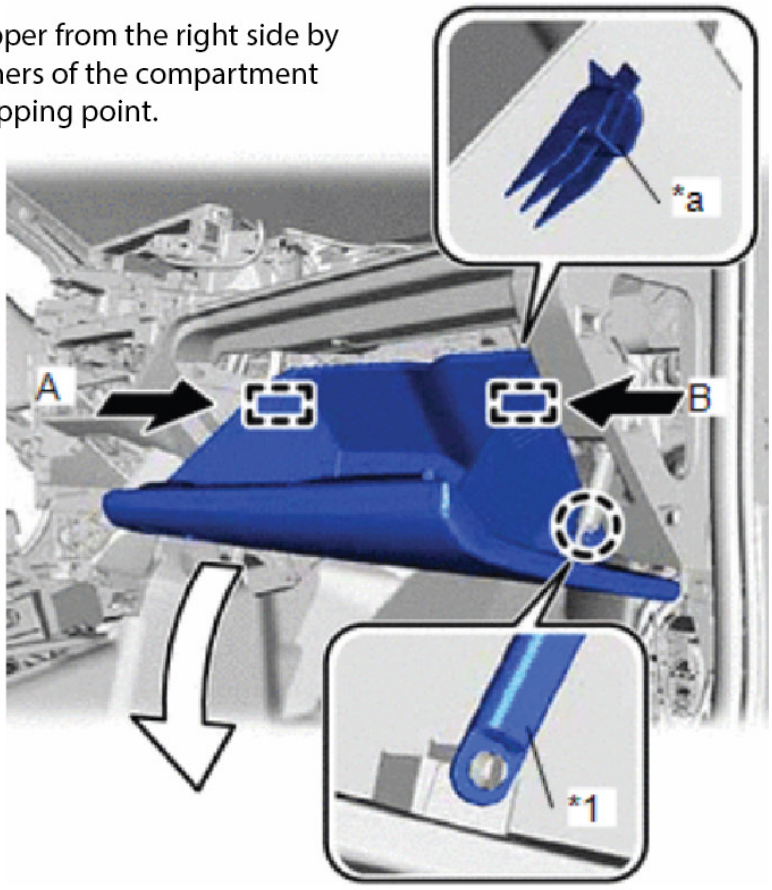

Continue opening the glove compartment until the door is near horizontal and then pull it up and outward off the claw hinges at the bottom to fully remove it.

Plug in the TLX03 harness' JS11 connector to the JS9 connector on the main harness and route the harness over to the passenger side of the vehicle. Unplug the top and bottom connectors from the Certification ECU and plug them in to the Female connectors on the TLX03 harness, plug the Male connectors from the TLX03 harness back into the respective spots on the Certification ECU.

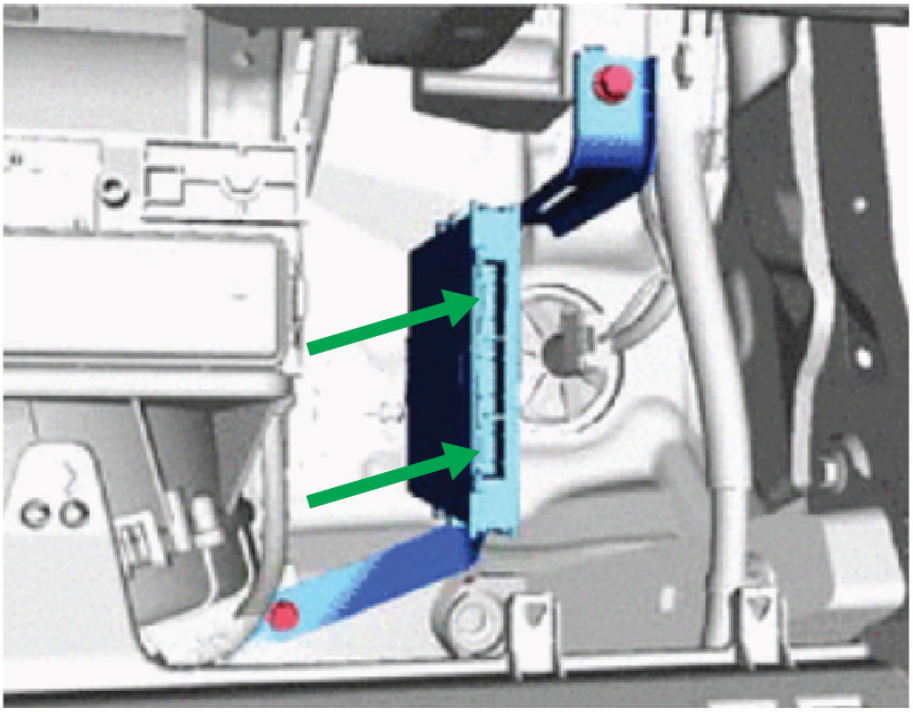

Lexus ES350 Wiring Schematic Overview

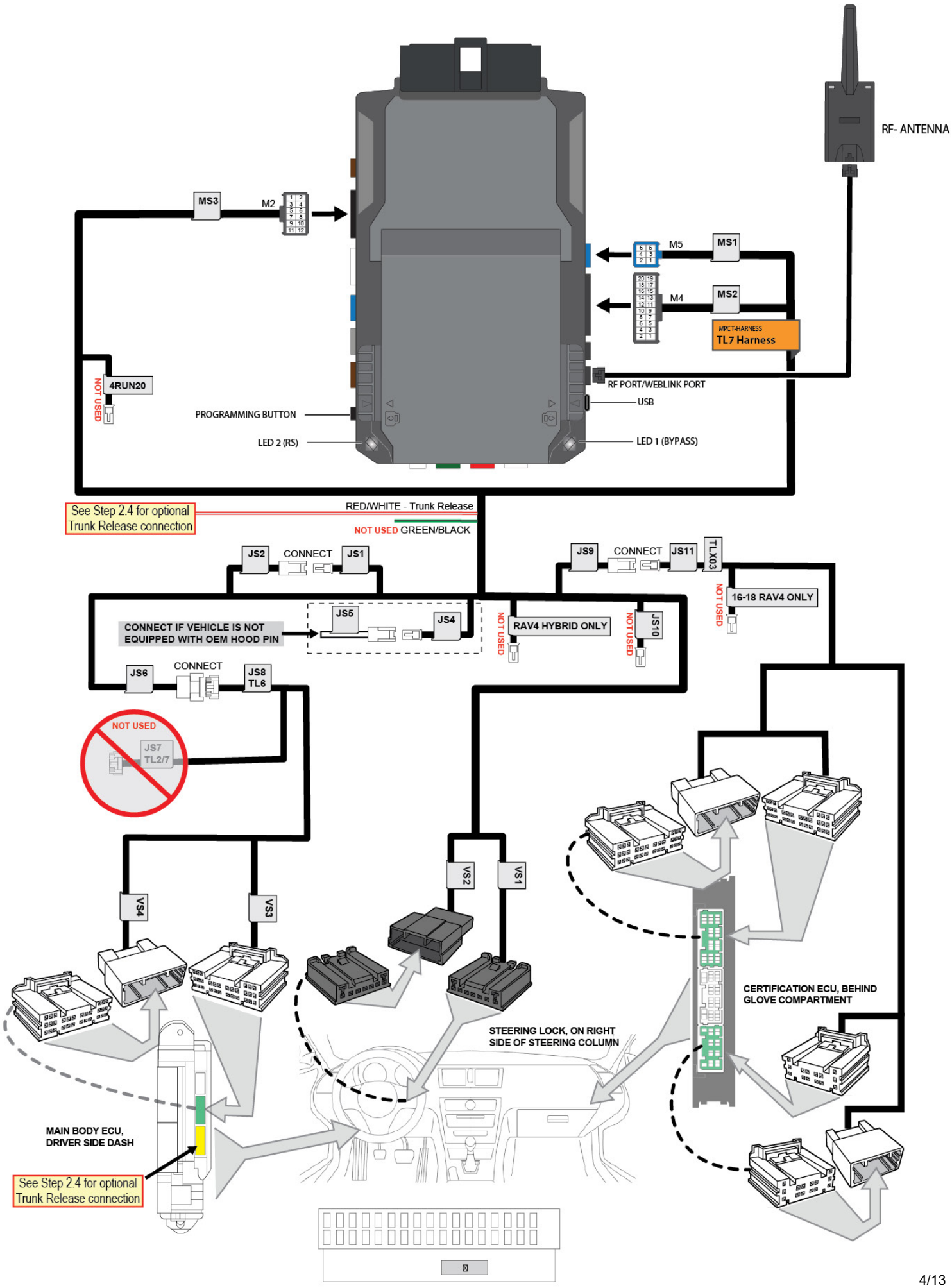

Disassembly and Accessing Connectors

Remove the Endcap panel from the left side of the dash by popping free the clips with the aid of a panel removal tool.

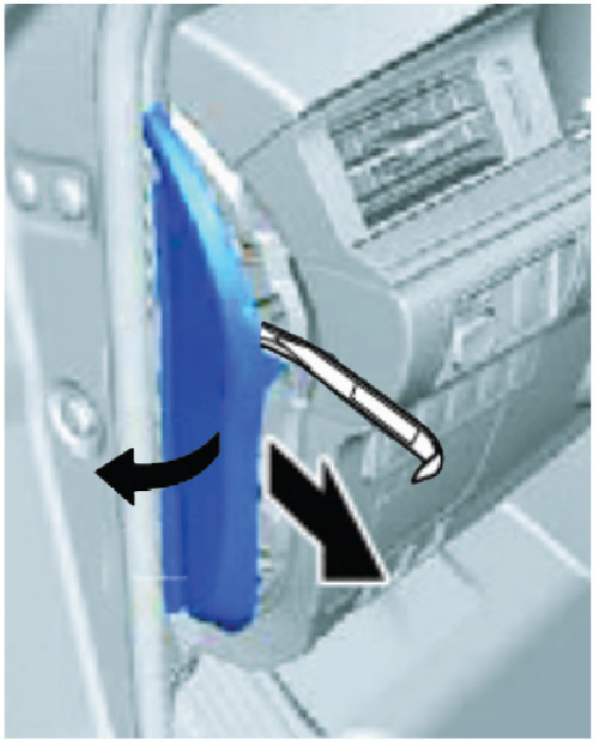

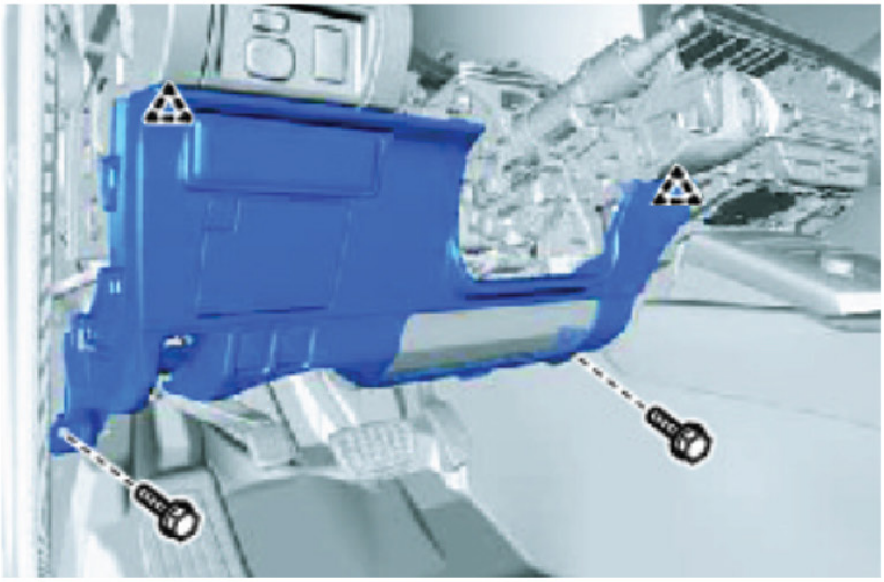

Push the top of the kick panel aside slightly and remove a10mm bolt from the bottom left corner of the panel. Remove another 10mm bolt from the bottom right corner of the panel. With the aid of a panel removal tool, release the pop clips from the top left and top right of the panel and remove the panel from the dash taking care while releasing the guide tabs around the airbag. Remove electrical connectors from the panel as needed.

The Main Body ECU is attached to the side of the fuse box on the left side of the dash.

Unplug the middle Main Body ECU connector and plug it in to VS4 on the T harness, plug VS3 back into the spot on the BCM.

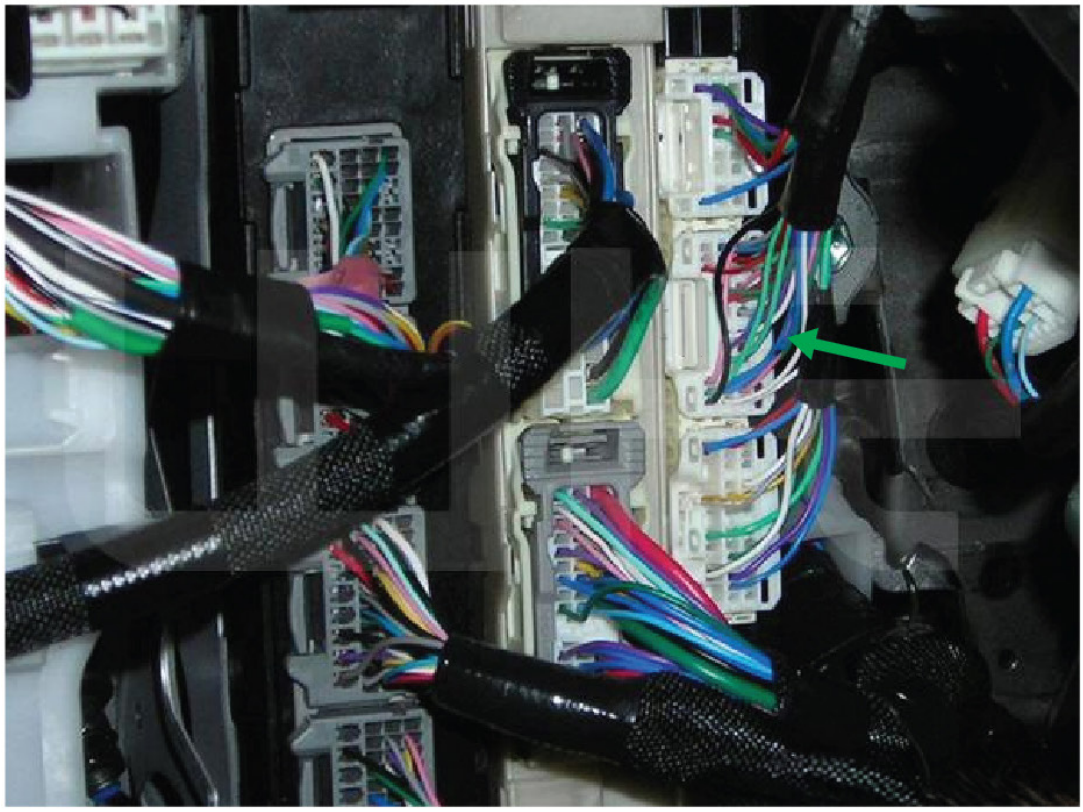

TLX03 Connections for Takeover

To allow for Takeover after remote starting the vehicle rather than having the vehicle shut down when a door is opened, the TLX03 connector must be plugged into the Certification ECU behind the Glove Compartment.

Remove the Insulator Panel from below the passenger side dash by squeezing a locking tab on the left end of the panel then popping the four clips free. Lower the panel and pull it away from the firewall.

You can attempt to reach the Certification ECU from underneath without removing the glove compartment however access is very tight and it will likely need to be removed to reach the connectors.

Remove the Passenger End Cap similar to how the drivers side was removed.

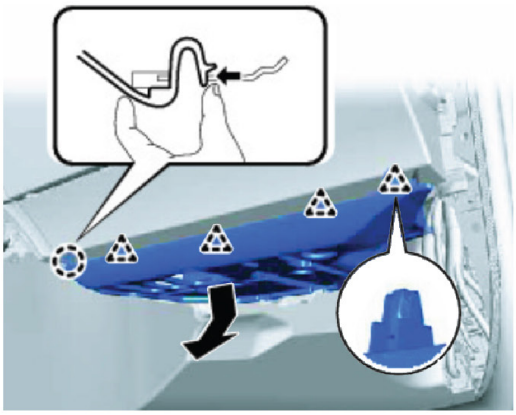

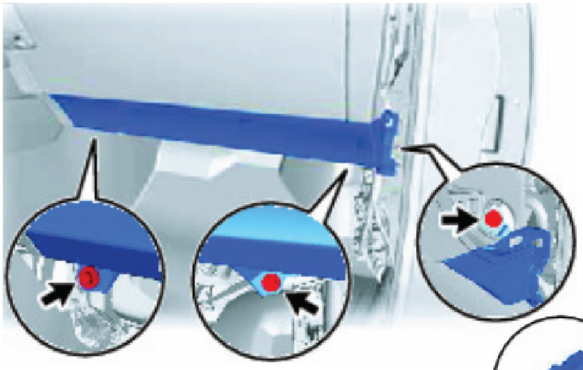

The Passenger Knee Airbag will need to be removed. Remove 1 bolt from the left side and 2 bolts from the right side then pull the airbag assembly out from the dash. Make sure the airbag is supported and do not allow it to hang from the electrical connector.

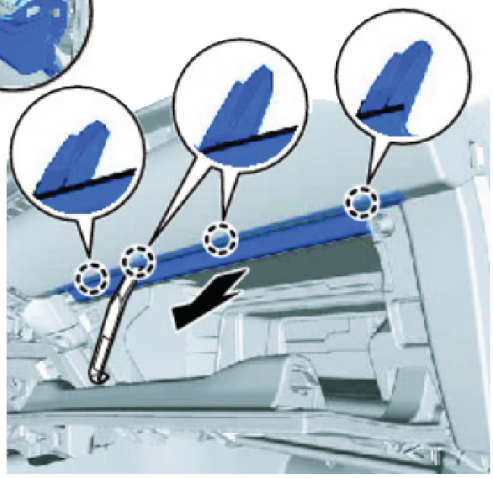

Using a panel removal tool, remove the trim along the top edge of the glove compartment to reveal the three screws at the top.



Remove 3 screws along the top edge of the glove compartment, then close the compartment door and remove one screw from both the bottom left and bottom right corners of the glove compartment assembly. Pull the entire assembly out from the dash and position it aside.

Plug in the TLX03 harness' JS11 connector to the JS9 connector on the main harness and route the harness over to the passenger side of the vehicle. Unplug the top and bottom connectors from the Certification ECU and plug them in to the Female connectors on the TLX03 harness, plug the Male connectors from the TLX03 harness back into the respective spots on the Certification ECU.

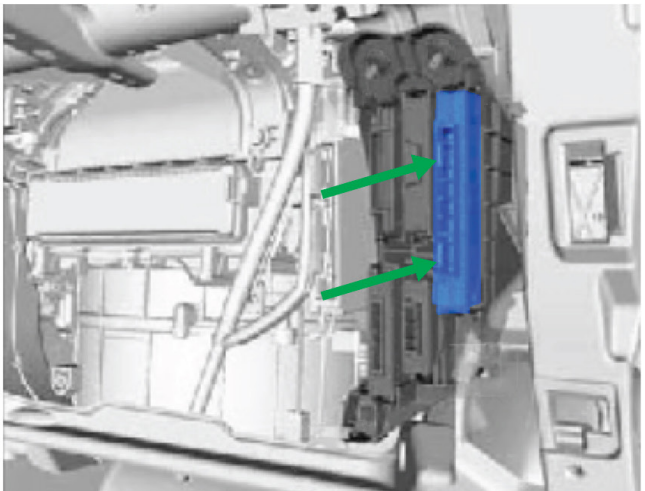

Lexus ES350 Optional Trunk Release

If you would like the remote or smartphone interface to be able to control the trunk release on your vehicle, a wire needs to be connected at the Main Body ECU in the connetor below the T-harness connector.

Connect Red/White from the T-harness to a the Red wire in pin 5 of the 28 pin connector in the vehicle.



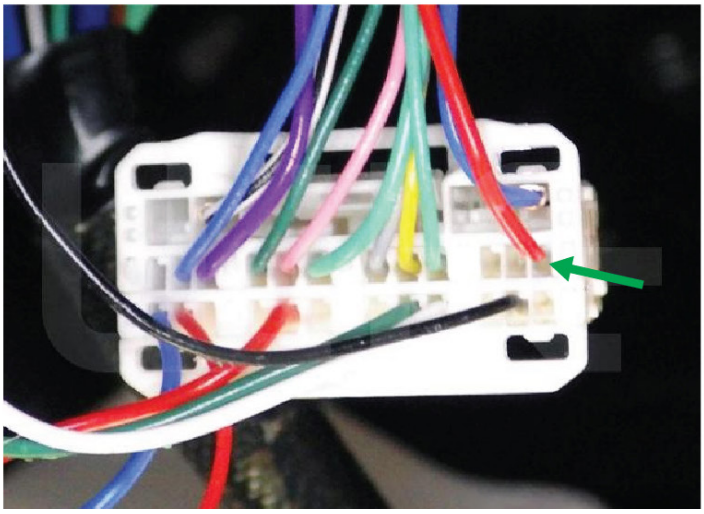

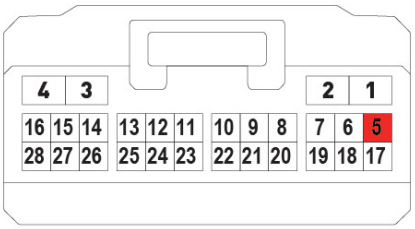

STEP 3: Programming

Your Remote Start module now needs to be paired to your vehicle. Before starting the programming sequence, make sure that all of the connectors are plugged into the module. Instructions for programming the Remote Start are below. Here are two important tips to help you avoid common mistakes:

Follow the programming instructions for the LED1 and LED2 descriptions to monitor flashes.



PROGRAM THE MODULE

01 

Push start button twice [2x] to ON position.

02 

LED 1 will turn solid RED.

If you get 9x RED Flashes, ensure the JS8 TL6 connector is plugged into JS6 on the harness.

03 

Within 5 seconds, LED 1 will flash GREEN rapidly.

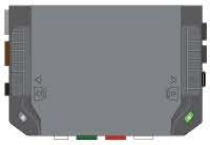

LED 1

04 

Push start button once [1x] to OFF position.

05 

Press unlock button once [1x] on OEM keyfob.

06 

Wait, LED 1 will turn solid GREEN for 2 seconds.

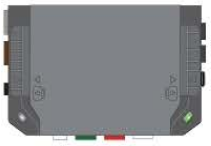

LED 1

07 

START vehicle for and allow it to idle for about 15 seconds.

08 

Press and hold the brake pedal.

09 

Press and release the module's programming button.

PROGRAM BUTTON

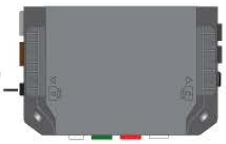

10 

Release the brake pedal.

11 

Wait, LED 2 will flash GREEN twice (2x) and then turn off.

LED 2



12 

Module Programming Procedure completed.

STEP 4: Finishing up!

After confirming that everything works properly, cap off or tape the ends of any wires you're not using to avoid grounding or other contacts.

- Now gather up all the wiring and neatly bundle it together using zip ties or electrical tape to prevent the wires from interfering with any of the moving parts under the dash.
- Test the system often when you are putting your vehicle back together.
- Find a secure place to put the remote start module and use zip ties to secure it. Be careful not to zip tie near your connections as it may create a bad connection.
- Replace any interior vehicle panels that were removed to gain access to the needed wires, in reverse order that they were removed.
- Test the system as you reinstall the panels in your vehicle to make sure you do not pull something loose or pinch a wire. Be careful not to run a screw through a wire or pinch a wire while reinstalling panels.

* If your test was unsuccessful, go back and re-check your wiring and programming. If you used T-Taps, make sure they are all attached correctly. Poorly made T-Tap connections are the #1 cause for tech support calls. Also, remember that T-Taps should never be used on data connections.

KEY TAKEOVER

This system will run for 15 minutes then turn off. If you approach the vehicle while it is still running, unlock the doors, enter the vehicle and close the door, within 45 seconds, press the brake pedal and hold it down for 3 seconds, you will hear a click from the remote starter turning off and you can drive away. Older model Toyotas turn off when you open the door, these models will require that you restart normally when you enter.

01 

All vehicle doors must be closed and locked prior to remote start sequence.

02 

Press the Lock button 3 times on the vehicles OEM factory remote.

03 

The vehicle engine will start.

04 

Press unlock on the OEM remote or request switch.

Enter the vehicle with the OEM keyfob and close the door.

05 

Time rescriction. Complete Step 6 within 45 seconds of unlocking the vehicle.

06 

Press the BRAKE pedal for about 3 seconds and release.

07 

The vehicle can now be put in to gear and driven..

>> 

failure to follow procedure will result in no take over and vehicle engine will shutdown.

If you have any installation questions or problems, you can create a support ticket for help at:

install.kleinn.com/support

Kleinn Automotive Accessories
520-579-1531

Copyright 2026 Kleinn Automotive Accessories

Troubleshooting Charts

When the system receives an activation command and you hear clicks from the HCX remote start module brain but the vehicle fails to start, Parking lights flash and HCX brain will click 3x times followed by a number of flashes and clicks for the diagnostics code. The second number of flashes/clicks corresponds to a remote start diagnostic error code. This will tell you why the remote starter is failing to start. The codes are as follows:

REMOTE STARTER ERROR CODES: NOTES	PARKING LIGHT FLASHES	DIAGNOSTIC
I WARNING: The following applies only when the parking lights are connected and supported by the system. II After a remote starter failure, the parking lights will flash three [3x] times followed by the error code. See table.	3 + 1	Tach is not programmed OR engine is already running.
	3 + 2	Key is in ignition ON position.
	3 + 3	Door is open.
	3 + 4	Trunk is open.
	3 + 5	Foot brake is ON.
	3 + 6	Hood is open.
	3 + 7	Loop is not cut.
	3 + 8	Vehicle failed to remote start.
	3 + 9	Vehicle movement detected (VSS).
	3 + 10	System is in Valet Mode.
	3 + 11	CAN communication failure
	3 + 12	RS not synchronized. Start vehicle with OEM key for 15 sec before trying a new RS sequence.
	3 + 13	Bypass problem.
	3 + 14	Idle mode or takeover is not available on this vehicle.
	3 + 15	Overheat protection.

REMOTE STARTER SHUTDOWN ERROR CODES: NOTES	PARKING LIGHT FLASHES	DIAGNOSTIC
I WARNING: The following applies only when the parking lights are connected and supported by the system. II If the engine shuts down after a remote starter sequence use the query command from a compatible aftermarket remote to display the shutdown error code. The parking lights will flash four [4x] times followed by the error code. See table.	4 + 1	Engine tach signal was lost.
	4 + 2	Emergency brake signal was lost.
	4 + 3	Foot brake ON detected.
	4 + 4	Hood open detected.
	4 + 5	Tach over rev detected.
	4 + 6	Glow plug timeout error.
	4 + 7	Vehicle movement detected (VSS).
	4 + 8	Check engine light ON.
	4 + 9	Low fuel level.
	4 + 10	Open door detected.
	4 + 11	CAN communication failure during RS sequence.
	4 + 12	RS not synchronized. Start vehicle with OEM key for 15 sec before trying a new RS sequence.
	4 + 13	Bypass problem.
	4 + 14	Idle mode or takeover is not available on this vehicle.
	4 + 15	Overheat protection.

MODULE STATUS DURING:	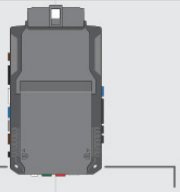 LED 2*	LED 1**	LED STATUS	DIAGNOSTIC
REMOTE START SEQUENCE	●		Flashing rapid RED	Remote start shutdown sequence.
	●		Flashing slow RED	Remote start shutdown error code. Contact technical support.
	●		Solid RED	Remote start crank delay.
	●		Flashing rapid GREEN	Remote start cycle in progress. Working correctly.
	●		1 GREEN flash	Remote start initiated successfully.
	●		3 GREEN flashes	Idle mode cycle in progress.
	●		4 GREEN flashes	Turbo mode cycle in progress.
		●	Flashing GREEN	Remote start cycle in progress. Displays vehicle platform during runtime.
		●	Rapid GREEN flashing	Secure takeover initiated. Waiting to complete takeover after brake press.
TRANSMITTER PROGRAMMING	●		Solid RED	Remote programming in progress, waiting for remote pairing.
	●		1 GREEN flash	Remote programmed.
	●		4 RED flashes	Shutdown remote starter before attempting remote programming.
	●		5 RED flashes	Engine must be off before attempting remote programming.
	●		6 RED flashes	System must be unlocked/disarmed before attempting remote programming.
	●		7 RED flashes	Module must be learned to the vehicle before attempting remote programming.

* LED 2 (RS) displays generic diagnostic codes specific to the remote start module. Orange LED flashes may appear red.
** LED 1 (Bypass) displays diagnostic codes specific to the firmware loaded on the module.
Visit the programming diagnostics page for more information.