MODEL SD17OBA-6450
INSTALLATION MANUAL

REV: C (1/25/2021)

© Kleinn Air Horns All rights reserved.

Phone: (520) 579-1531
Web: www.Kleinn.com

SD17OBA-6450

Installation and Operation Manual

This digital PDF is interactive.

Please save ink and paper…

Open interactive manual using Adobe Reader ®

on PC, MAC, and all smart devices

1 Table of Contents

1 Table of Contents 2
1. How to Use this Manual 4
1.1. Interactive Manual using Adobe Reader 4
1.2. Your Kit Part Number and this Manual 4
1.3. Illustration/Photo Details and Orientation 4
2 Safety First 5
3 Application Chart 6
3.1 100% Direct Bolt-On Vehicle List 6
3.2 **Excluded Vehicles 6
3.3 Aftermarket Product Compatibility 6
4 Kit Installation Overview 7
4.1 Approximate Installation Time 8
4.2 ***Quick Install Outline 8
5 List of Tools and Supplies 9
5.1 Standard Tool List (Required) 9
5.2 Special Tool List (Recommended) 9
5.3 Shop Consumables List (Recommended) 9
6 Parts List 10
6.1 Pre-Packaged Electro-Mechanical Items 10
6.2 Air Fittings and Related Items 10
6.3 Electrical Small Components and Related Items 12
6.4 Bolt-On Mounting Brackets 12
6.5 Hardware/Fasteners 13
7 On-Vehicle Electrical Installation 14
7.1 Suggested Wiring Diagram for Horn and Air Compressor 14
7.2 Suggested Wire Routing for Horn, Air Compressor, and Pressure Switch 15
7.3 Disconnect Vehicle Battery(s) 15
7.4 Attach Relay to Vehicle 15
7.5 Connect Relay to Wiring 15
7.6 Pressure Switch 15
8 Bench Assembly Steps 16

8.1 Mount Compressor to Bracket 16
8.2 Assemble Fittings and Tubing to Air Tank 16
9 On-Vehicle Mechanical Assembly Steps 17
9.1 Air Tank Assembly Installation 17
9.2 Compressor and Bracket Installation 25
10 On Vehicle Air Line Installation 26
10.1 Suggested Routing Diagram for Horns, Air Tank and Air Compressor 26
10.2 Connect Air Compressor to Air Tank 26
10.3 Attach Air Compressor Inlet Filter 27
11 Initial Testing of Kit 27
11.1 Reconnect Vehicle Battery(s) 27
11.2 Test Air Compressor 27
11.3 Test Train Horns 27
11.4 Test Quick Connect Coupler 28
11.5 Raise/Re-install Spare Tire 28
12 General Operation of Kit 28
12.1 Compressor Operation 28
12.2 Horn Operation 28
13 Routine Maintenance 29
14 Warranty Information 30

1. How to Use this Manual

1.1. Interactive Manual using Adobe Reader

It is recommended to open this digital PDF using Adobe Reader ® to take advantage of following key features:

- **Hyperlinks** (blue underlined text) allow access to additional content via internet; click/tap to activate
- **Table of Contents** page allows easily navigating this manual; click/tap any section line to go to it
- **Bookmarks** allow quickly navigating to any section; click/tap
- **Zoom IN** on pictures by pressing "CTRL and +" at same time on PC, or pinch in on smart devices
- **Zoom OUT** on pictures by pressing "CTRL and -" at same time on PC, or pinch out on smart devices

---

To install Adobe Reader ®

On PC, or Mac

- visit https://get.adobe.com/reader/otherversions/

On Android, iPhone/iPad, and Windows devices,

- visit https://acrobat.adobe.com/us/en/acrobat/mobile-app.html

---

1.2. Your Kit Part Number and this Manual

This manual covers installation, testing, and operation of following kit part numbers

1. **SD17OBA-6450** (i.e., on-board air, 6450RC)

NOTE: Illustrations and pictures contained herein may represent only one kit part number. Where critical differences exist between kits (i.e., different parts, orientation, mounting points, etc.), additional text, or necessary graphics are provided to minimize confusion.

Parts list explicitly state kit differences with **(BOLD TEXT)** inside parenthesis, shown below part number.

1.3. Illustration/Photo Details and Orientation

This manual may use digitally created illustrations, and/or actual photos of example vehicle. These graphics may not include exact items found on your vehicle (i.e., electrical wiring, fuel lines, body panels, etc.). Illustrations typically will be missing details and are for clarity to show critical mounting locations and orientation on vehicle.

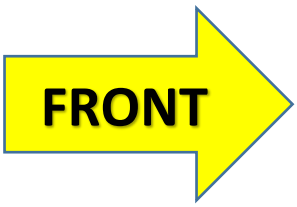

Throughout this manual yellow arrows with text reading "FRONT", may be present over illustrations and pictures. These arrows specify direction toward front of vehicle and provide clarity to how illustration is viewed.

2 Safety First

Read manual thoroughly before starting installation of this kit. Verify you have all parts listed and that you clearly understand this installation procedure. Contact Kleinn technical support for any questions.

Installation of this kit requires **moderate mechanical aptitude**; seek professional help if you're not competent using hand tools in tight uncomfortable spaces, and around possibly rusted and sharp vehicle parts.

Before starting, obtain proper tools required to perform installation correctly, adequate lighting, eye protection, hearing protection for operating train horns, and hand protection to guard against sharp edges and metal burrs, which may be present on kit parts and vehicle parts.

Throughout this manual the following words may be used; be aware of their meaning and application.

CAUTION: means damage could occur to vehicle, or kit parts during, or after installation

WARNING: means injury could occur to you or others, including damage to vehicle, or kit parts

DANGER: means serious injury or death could occur to you or others during installation

3 Application Chart

3.1 100% Direct Bolt-On Vehicle List

SD17OBA-6450 is a 100% direct bolt-on aftermarket product for FORD vehicles listed in below chart; every effort has been made to verify correct fitment on these vehicles in their factory, non-modified conditions.

MODEL YR	MODEL	DRIVE	ENGINE	BODY	TRIM
2017-2026	F-250	2WD, 4WD	ALL	ALL	ALL**
2017-2026	F-350	2WD, 4WD, DUALLY	ALL	ALL	ALL**

NOTE: All vehicles listed may require drilling holes for ground wires and installing switches, based on preference of installed switch locations and wire grounding points.

NOTE: ALL GAS ENGINES MAY REQUIRE TRIMMING OF HEAT SHIELD BELOW SPARE TIRE.

3.2 **Excluded Vehicles

There are no known exclusions for SD17OBA-6450 at this time.

3.3 Aftermarket Product Compatibility

This kit has been designed and tested to be compatible with leading manufacturers of aftermarket truck steps, such as Amp Research Power Steps ® and all OEM standard and optional steps.

4 Kit Installation Overview

SD17OBA-6450 consists of following sub-systems, located on vehicle, as follows:

ITEM	DESCRIPTION	MOUNTING LOCATION	APPROX. INSTALL TIME
1	Air Tank	Under rear bed floor, directly behind rear axle assembly. Attached to frame rails.	**4+ Hours**
2	6450RC Air Compressor	Under rear bed floor, inside of passenger frame rail above spare tire. Attached to frame rail.	**1-2 Hours**

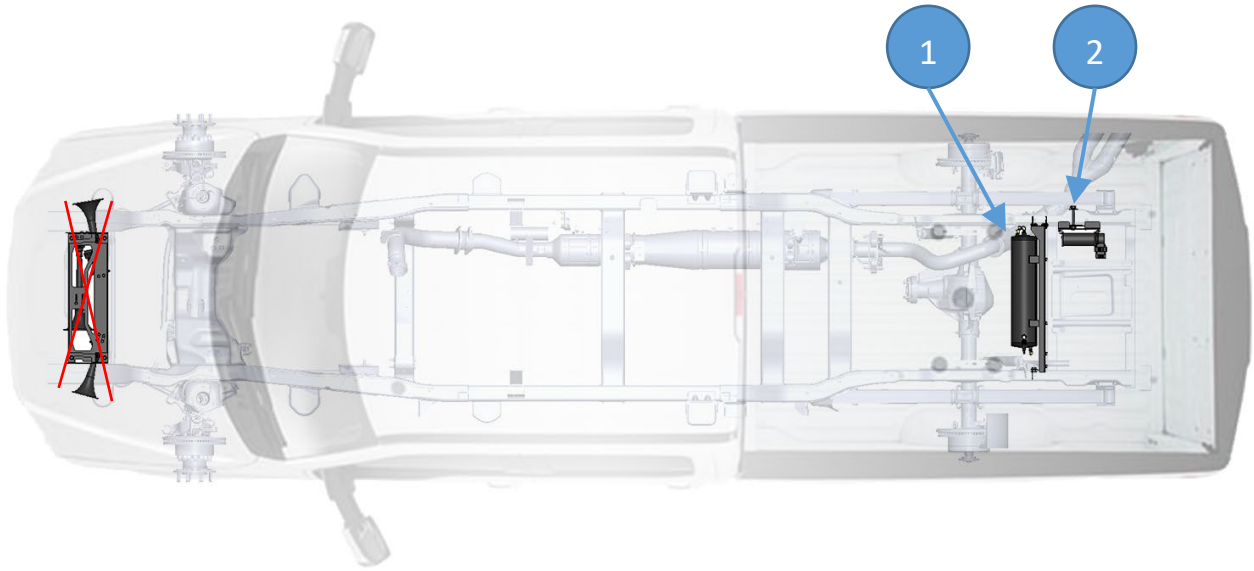

Figure 1 - Top View 2017 F-250 Crew Cab Long Bed (734 Shown)

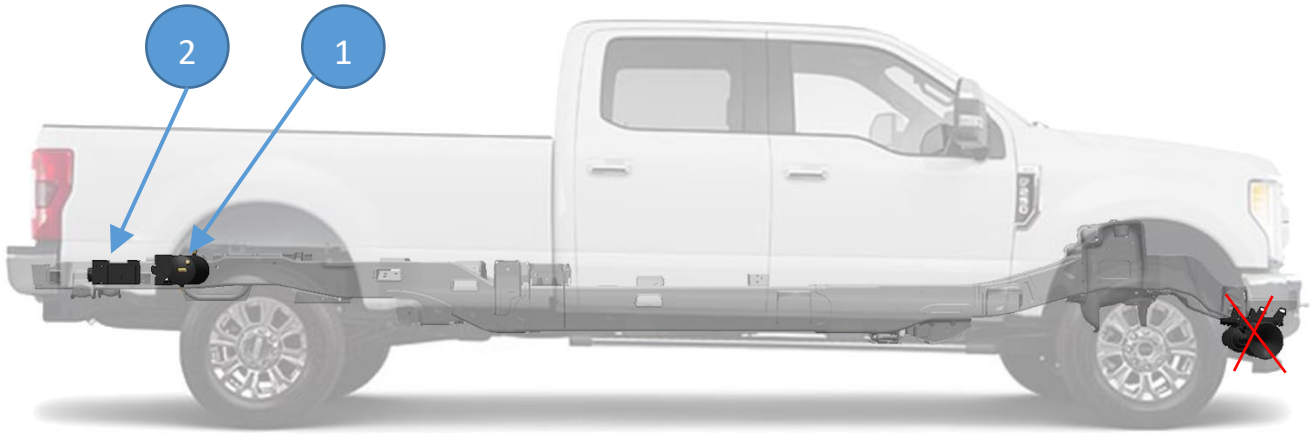

Figure 2 - Passenger Side View 2017 F-250 Crew Cab Long Bed (734 Shown)

4.1 Approximate Installation Time

SD17OBA-6450 is a multi-faceted product consisting of multiple mechanical, electrical, and pneumatic components.

For a typical home mechanic, auto enthusiast, or technician installing a Kleinn Bolt-On kit for first time, a professional installation job with setup and testing of final product, is estimated to take:

- **6+ Hours**

4.2 ***Quick Install Outline

For person(s) with experience installing Kleinn bolt-on kits, SD17OBA-6450 can be installed in an order similar to below:

1. Route wiring, install Relay, and Horn Switch
2. Assemble Air Fittings to Air Tank
3. Assemble Compressor to Bracket
4. Lower/remove spare tire
5. Mount Air Tank Brackets to frame
6. Mount Air Tank to Air Tank Bracket; pre-wire and pre-plumb Tank first
7. Mount Compressor and Bracket to frame
8. Route Air Tubing, Quick Connect Coupler, Air Compressor filter, and connect all Pneumatic components
9. Test System and adjust, as needed
10. Raise/re-install spare tire

5 List of Tools and Supplies

5.1 Standard Tool List (Required)

1. Basic mechanic's 3/8" drive socket sets with extensions
    a. Inch Size Sockets (1/4" – 1" Hex)
    b. Metric Size Sockets (6mm – 20mm Hex)
2. Basic mechanic's combination wrenches (box/open-end)
    a. Inch Size Wrenches (1/4" – 1" Hex)
    b. Metric Size Wrenches (6mm – 20mm Hex)
3. Basic mechanic's screwdriver set (Philips, Flat Head)
4. Diagonal Cutter/Wire Cutter Pliers
5. Wire Strippers
6. Wire Terminal Crimpers
7. Slip-Joint Pliers
8. Utility Knife, or Utility Razor blade
9. Magnetic retrieval tool

5.2 Special Tool List (Recommended)

1. 10-100 ft.-lb. torque wrench
2. 20-150 in.-lb. torque wrench
3. Multi-Meter for 12V DC electrical systems, or equivalent
4. 12V DC Test Light, or equivalent
5. Trim Panel Tool, for removing wiring push pins

5.3 Shop Consumables List (Recommended)

1. Quality Electrical tape
2. Di-electric grease for electrical connections
3. Heat Shrink tubing for electrical connections
4. Blue Loctite (i.e., Loctite PN 242), or equivalent
5. Sand Paper, or Wire Brushes for installing ground wires
6. Extra plastic zip ties > 6" long
7. Extra NPT sealant (i.e., Kleinn Air Horn Juice, Teflon tape, etc.)
8. Touch-up paint for frame/chassis
9. Typical cleanup supplies

6 Parts List

Unpackage and organize Kit across a large work area and verify all parts are included, as listed below. Contact Kleinn support if any questions arise.

1. Review pre-packaged items (i.e., train horn box, air compressor, air tank, etc.)
2. Review Air Fittings and Tubing
3. Review Wiring and Accessories
4. Review Bolt-On Mounting Brackets
5. Review Hardware/Fasteners

6.1 Pre-Packaged Electro-Mechanical Items

NOTE: Items in this section come in their own packages and may include additional items inside package

ITEM	QTY	PART NUMBER	DESCRIPTION	PICTURE
1	1	6450RC	6450RC Compressor Kit, with included hardware, and remote air supply line	

6.2 Air Fittings and Related Items

ITEM	QTY	PART NUMBER	DESCRIPTION	PICTURE
2	1	6351RT	Air Tank, 6-Port, Long Body	
3	1	50040 (view location on Air Tank)	1/4” Hex Plug	
4	1	52835 (view location on Air Tank)	1/4” NPT, Drain Valve	

5	1	52175 (view location on Air Tank)	1/4” NPT, 175 PSI Safety Valve	
6	2	51414NPTL (view location on Air Tank)	1/4” NPT, 90 Deg Female Elbow	
7	1	53814R (view location on Air Tank)	3/8” NPT FEMALE X 1/4” NPT Reducer Fitting	
8	1	2151 (view location on Air Tank)	1/4” NPT Pressure Switch	
9	1	1302L	Quick Connect Air Coupler Kit, with relocation bracket	
10	1	INF-1	Inflator Kit, with Air Hose and Bag	
11	1	KLEINN AIR HORN JUICE	Thread Sealant for NPT Fittings	

6.3 Electrical Small Components and Related Items

ITEM	QTY	PART NUMBER	DESCRIPTION	PICTURE
12	1	WIRE KIT	Full Wire Kit, with electrical connectors and zip ties	
13	1	¼” WIRE LOOM, 20 ft. Long	1/4” Wire loom for electrical routing	
14	1	1/8” WIRE LOOM, 10 ft. Long	1/8” wire loom for electrical routing	

6.4 Bolt-On Mounting Brackets

ITEM	QTY	PART NUMBER	DESCRIPTION	PICTURE
15	1	SDGEN4-TANK-BRKT-PA	Air Tank Bracket, Passenger Side	
16	1	SDGEN4-TANK-BRKT-DR	Air Tank Bracket, Driver Side	
17	3	SDGEN4-TANK-BRKT-NU	Air Tank Nut Plate	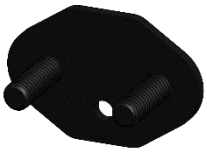
18	1	SDGEN4-COMP-BRKT-PA	Compressor Bracket	

6.5 Hardware/Fasteners

ITEM	QTY	SIZE, TYPE	DESCRIPTION	WHERE USED
HW1	6	5/16”-18, HEX NUT	HEX NUT, GRADE 2, ZINC PLATED	TANK NUT PLATES
HW2	6	5/16”, FLAT WASHER	SAE FLAT WASHER, ZINC PLATED	TANK NUT PLATES
HW3	6	5/16”, LOCK WASHER	SPLIT LOCK WASHER, ZINC PLATED	TANK NUT PLATES
HW4	6	7/16”-14 X 1.25”, HEX BOLT	HEX BOLT, GRADE 2, ZINC PLATED	TANK MOUNTING KIT (4) TANK BRACKET (2)
HW5	6	7/16”-14, HEX NUT	HEX NUT, GRADE 2, ZINC PLATED	TANK MOUNTING KIT (4) TANK BRACKET (2)
HW6	12	7/16”, FLAT WASHER	SAE FLAT WASHER, ZINC PLATED	TANK MOUNTING (8) TANK BRACKET (4)
HW7	6	7/16”, LOCK WASHER	SPLIT LOCK WASHER, ZINC PLATED	TANK MOUNTING (4) TANK BRACKET (2)
HW8	1	3/4”-10 X 5”, HEX BOLT	HEX BOLT, GRADE 2, ZINC PLATED	COMPRESSOR BRACKET
HW9	1	3/4”, FLAT WASHER	USS FLAT WASHER, ZINC PLATED (.81” ID X 2” OD)	COMPRESSOR BRACKET
HW10	1	3/4”, LOCK WASHER	SPLIT LOCK WASHER, ZINC PLATED	COMPRESSOR BRACKET
HW11	3	1/4”-20 X 2”, SET SCREW	SET SCREW, HEX DRIVE, BLACK-OXIDE	TANK NUT PLATE
HW12	8	#10, FLAT WASHER	USS FLAT WASHER, ZINC PLATED (.25” ID X .56” OD)	COMPRESSOR MOUNTING BOLTS

7 On-Vehicle Electrical Installation

CAUTION: *Follow all recommended safety precautions for working on vehicle's electrical system; consult vehicle owner's manual for further instruction.*

7.1 Suggested Wiring Diagram for Horn and Air Compressor

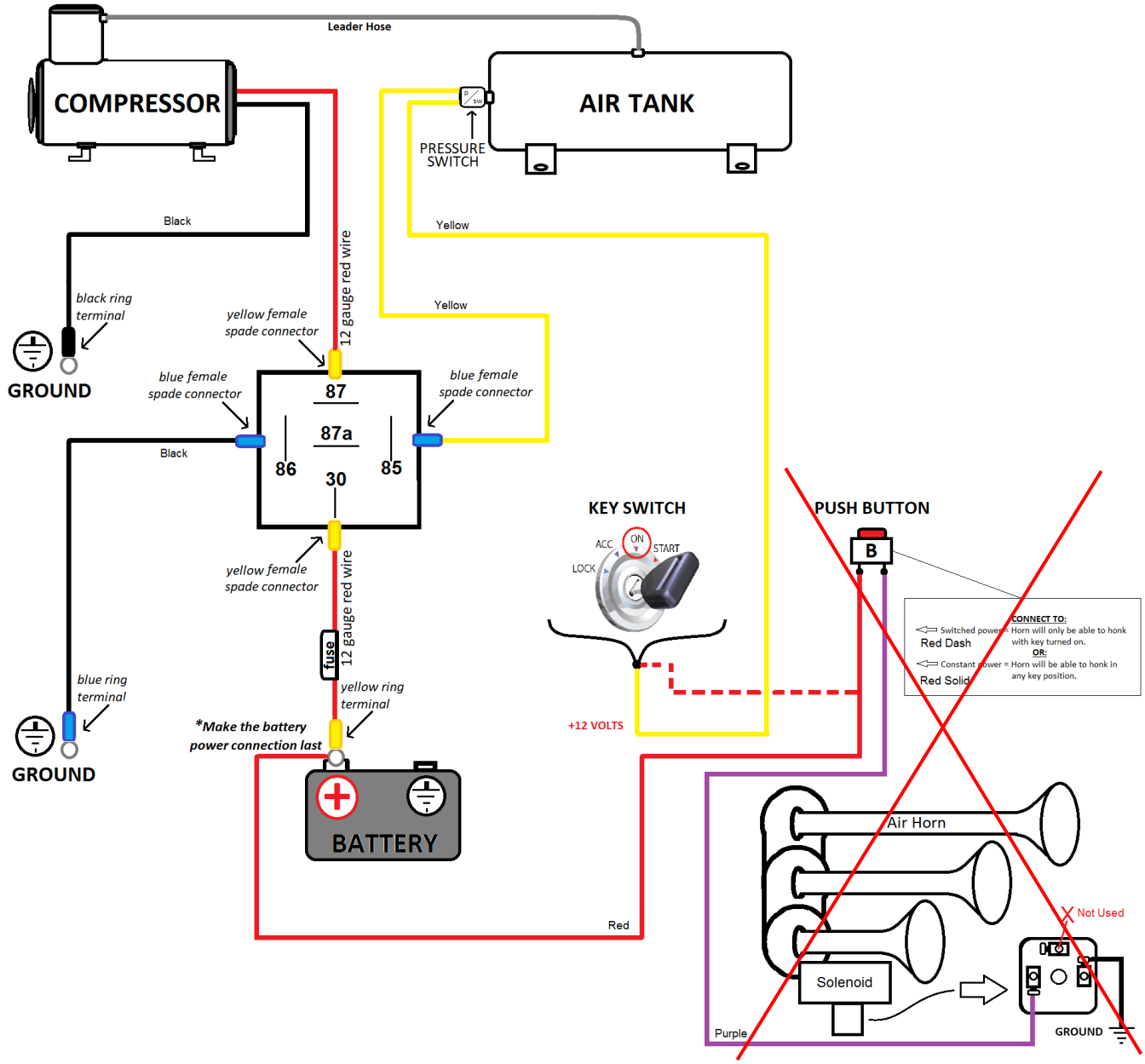

Figure 3 - Ignition Relay Diagram for 230 & 734

7.2 Suggested Wire Routing for Horn, Air Compressor, and Pressure Switch

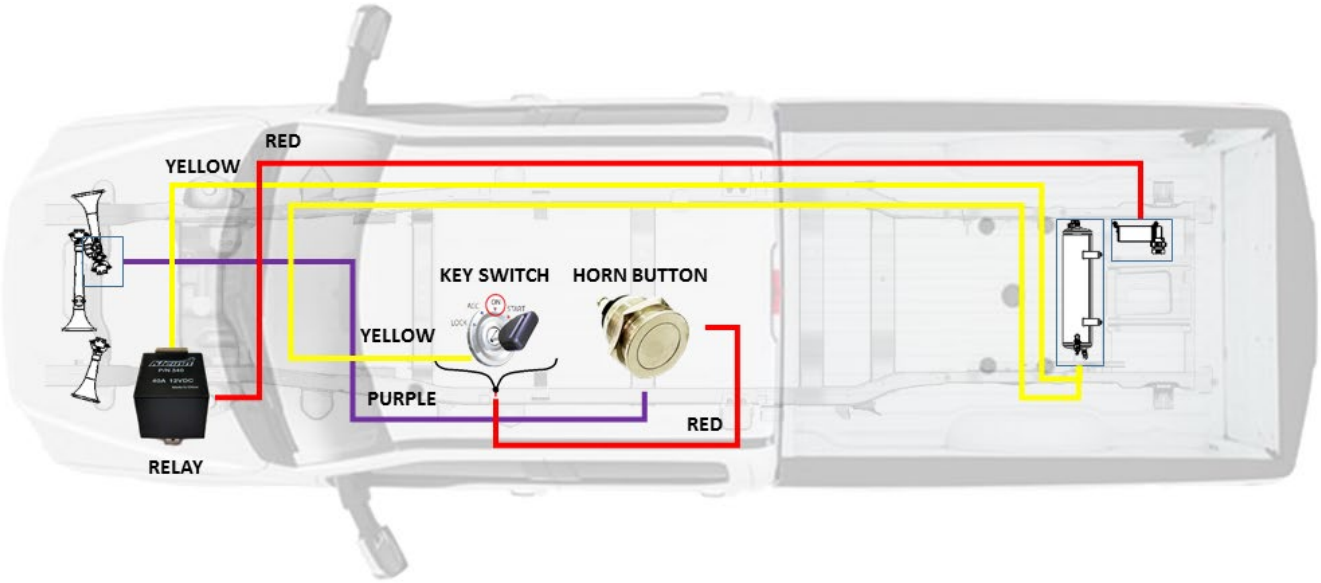

Figure 4 - SD17KIT-230 / SD17KIT-734 Recommended Wire Routing

7.3 Disconnect Vehicle Battery(s)

7.4 Attach Relay to Vehicle

a. Fasten relay to vehicle body, under hood using supplied self-tapping screws. It is recommended to install in location near factory ground bolt, or battery(s) to minimize drilling holes.
    i. Reference wiring diagrams

7.5 Connect Relay to Wiring

a. Connect routed wiring to relay, per wiring diagram.

7.6 Pressure Switch

a. Pressure switch will be connected once Air Tank is installed on bracket; however, due to space constraints, it is optional to connect pressure switch, per wiring diagram then install switch into Air Tank before hanging Tank on its Bracket.

8 Bench Assembly Steps

8.1 Mount Compressor to Bracket

1. Attach Air Compressor to bracket, per below illustration
    a. Assemble fasteners clean and dry, using large washers included in SD17 Hardware kit

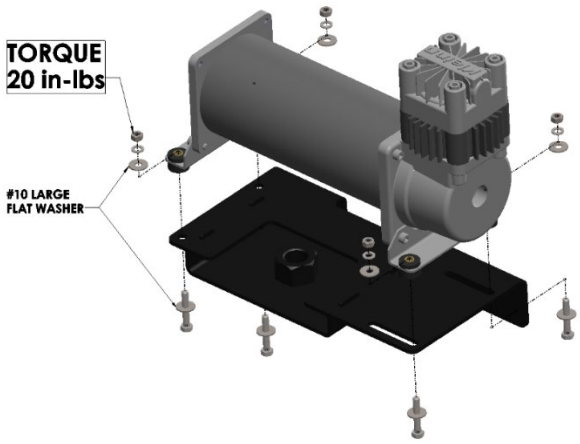

8.2 Assemble Fittings and Tubing to Air Tank

1. Attach and tighten air fittings to tank, per below illustrations.
    a. Apply two small drops of Kleinn Air Horn Juice to each male pipe thread.
    b. Hand-tighten each fitting, then further tighten each 1/4-1/2 turn using proper sized box-end wrench; adjust as necessary to match fitting orientation shown.
    c. Reference Parts List for description of part numbers; Go to Fittings List

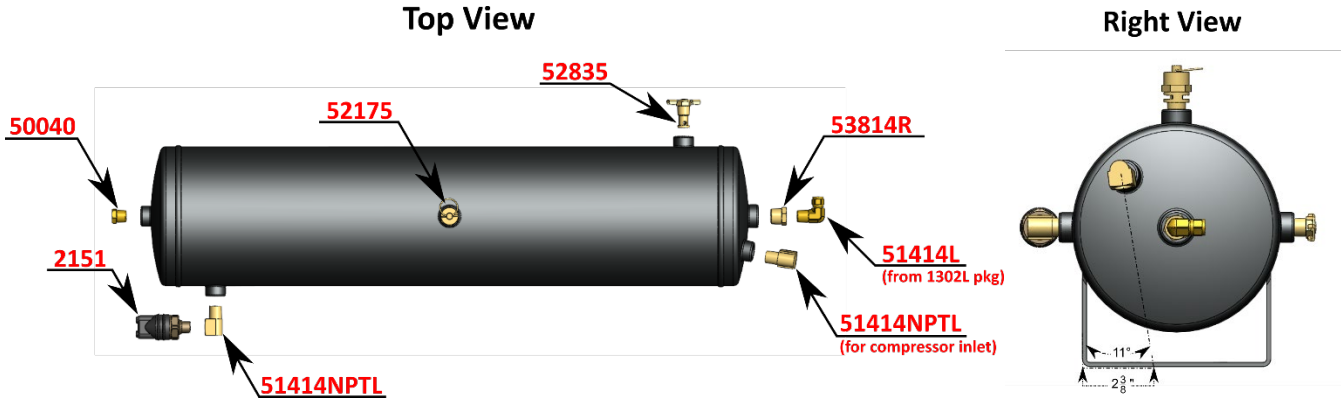

2. Attach air tubing to tank & wiring to pressure switch; space constraints exist during tank installation increasing difficulty of this step.
    a. Remove Air Compressor leader hose from compressor and install, per below illustration
    b. Apply two small drops of Kleinn Air Horn Juice to each male pipe thread.
    c. Hand-tighten each fitting, then further tighten each 1/4-1/2 turn using proper sized box-end wrench; adjust as necessary to match fitting orientation shown.

9 On-Vehicle Mechanical Assembly Steps

Complete following steps on vehicle.

Raise vehicle off ground using appropriate vehicle lift, ramps, or jack stands.

> ***DANGER**: Installation requires being underneath vehicle and applying forces to vehicle chassis. Follow all recommended safety precautions for raising vehicle; consult vehicle owner's manual.*

9.1 Air Tank Assembly Installation

> ***WARNING:** Installing air tank onto vehicle chassis requires hands to be near exhaust system; make sure vehicle exhaust is cool enough to touch before installation.*

1. **Lower/Remove spare tire from back of vehicle; consult owner's manual for direction**
2. Before starting, ensure you have immediate access to all set screws included in SD17 Hardware Kit
3. Insert Passenger Front Nut Plate into frame pocket in location shown below

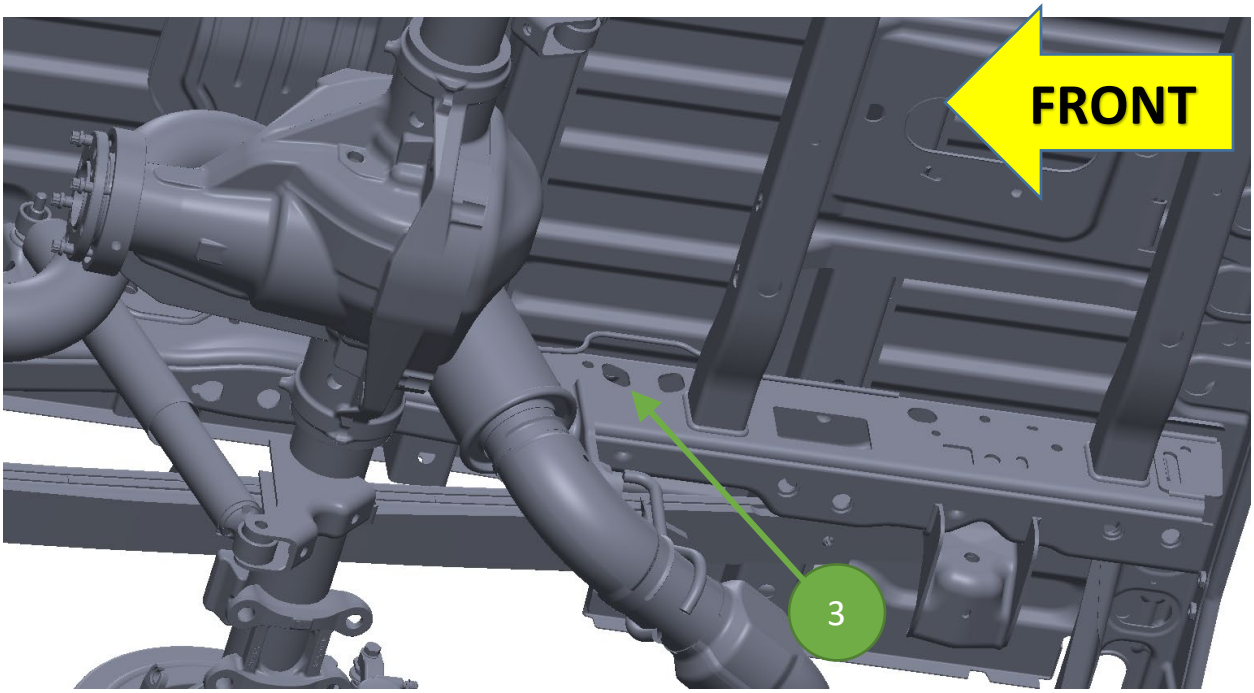

To easily insert Nut Plate, follow this technique:

a. Insert Nut Plate into frame opening while holding threads with fingers

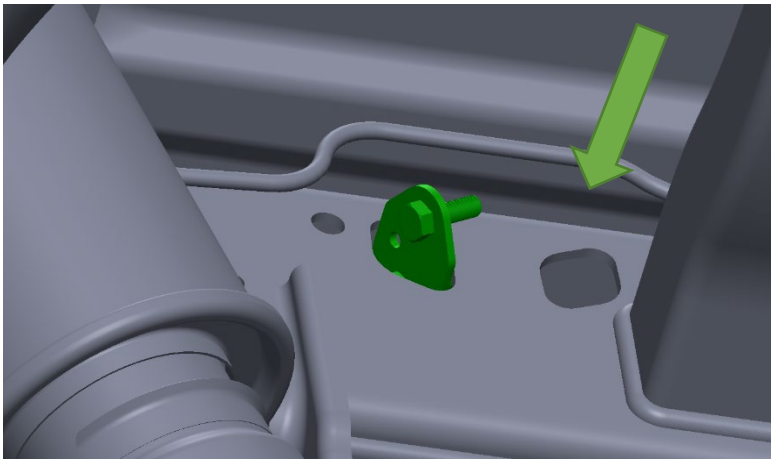

b. Rotate Nut Plate into frame as if attempting to drop it inside; use caution so as not to drop Nut Plate inside frame. If this occurs, use a magnetic retrieval tool to pick it out, or simply tie string around it before trying to insert it.

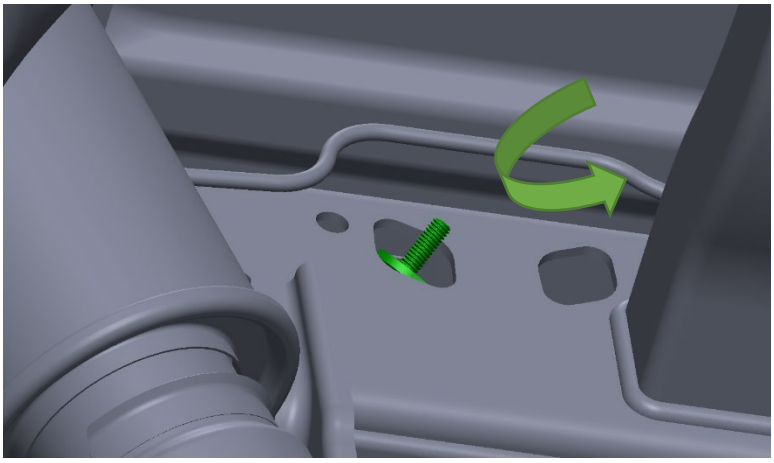

c. With Nut Plate almost entirely inside frame, rotate it counter clockwise while pulling outward to align threads with hole, as shown.

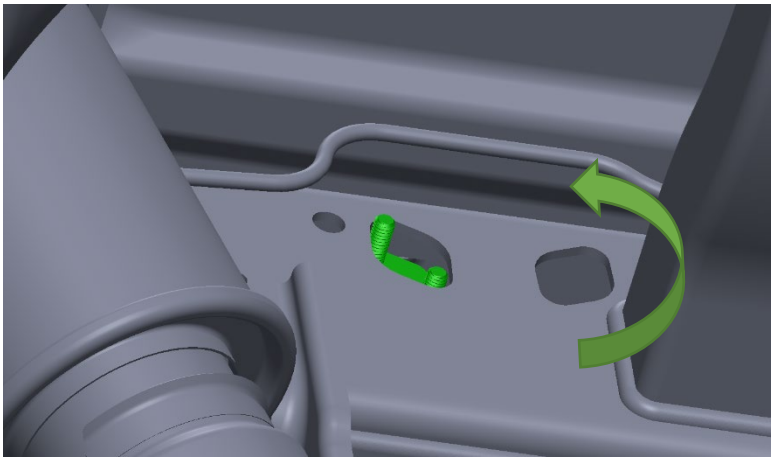

d. While holding Nut Plate, thread a set screw through threaded hole until set screw touches inside of frame; this will hold Nut Plate in position.

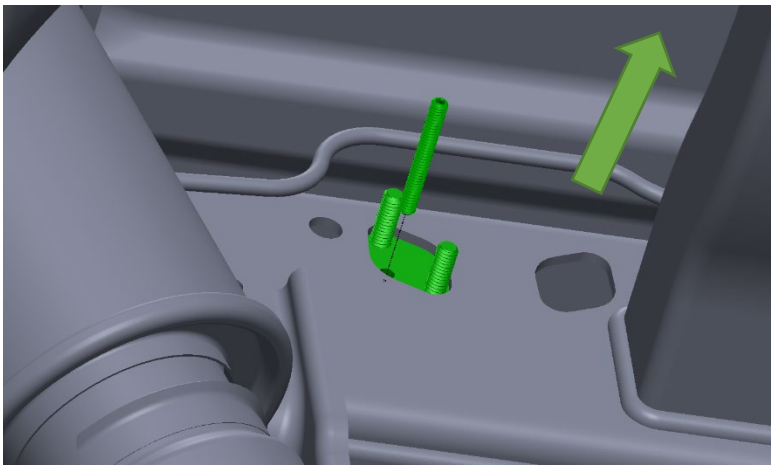

e. Re-align Nut Plate, if necessary to ensure it is nearly perfectly centered in frame; once happy with location snugly tighten set screw; it will be removed later.

4. Repeat with second Nut Plate in Passenger Rear hole, as shown below.

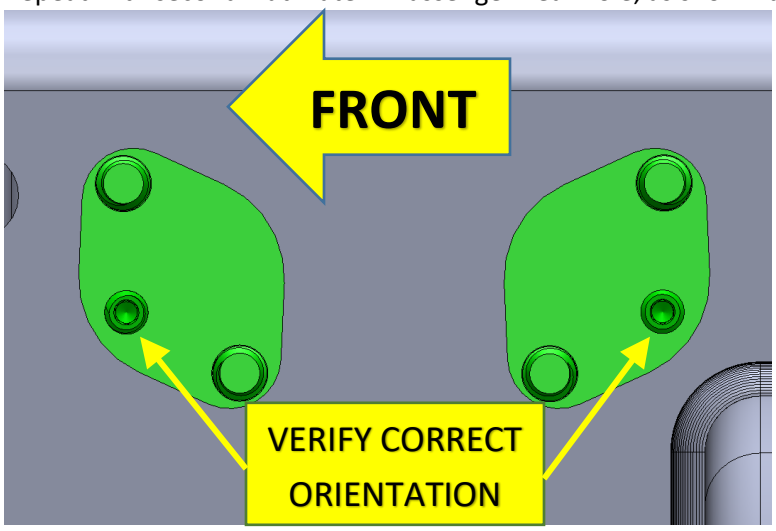

5. Using Panel Trim removal tool, gently remove 3 plastic push pins from wire harness on inside of Driver frame rail, per below. Be careful removing push pins, as they will need to be re-used.

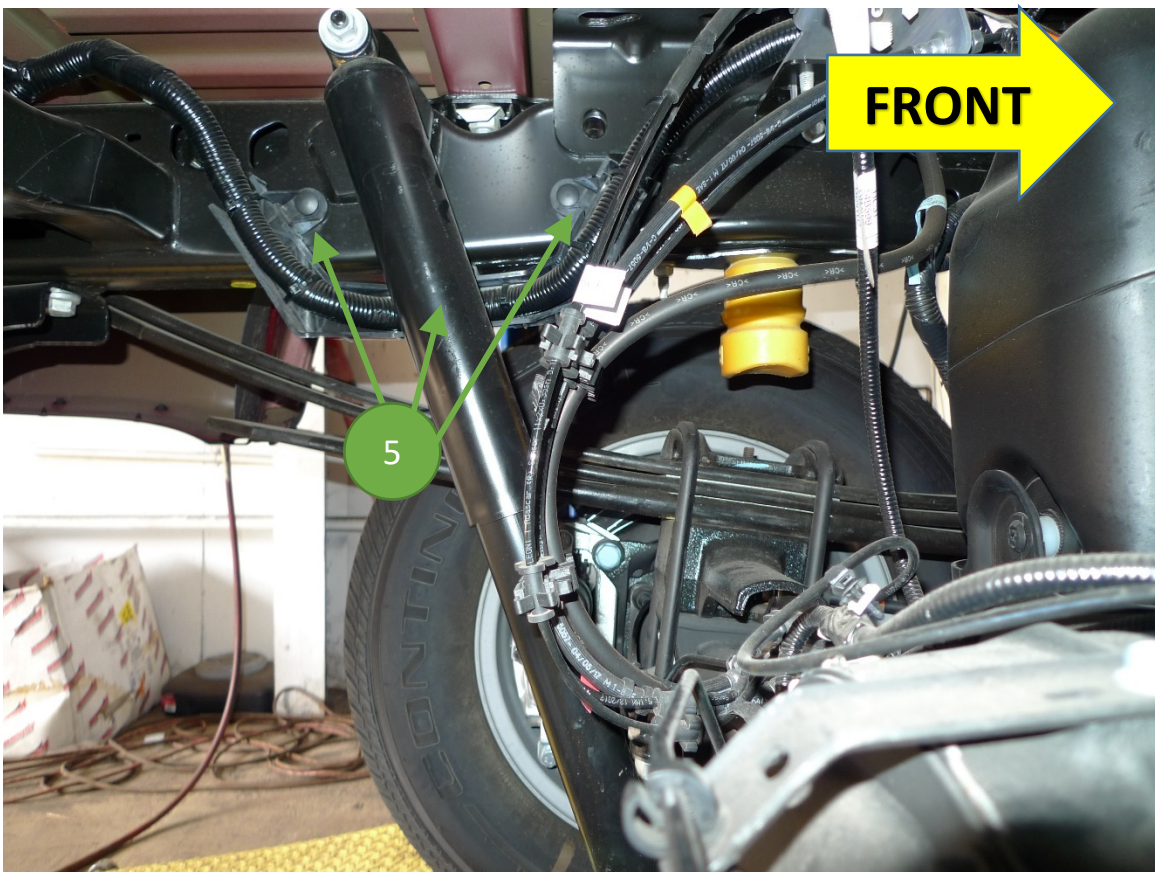

6. Using same technique performed earlier, install Driver Front Nut Plate in frame pocket shown below

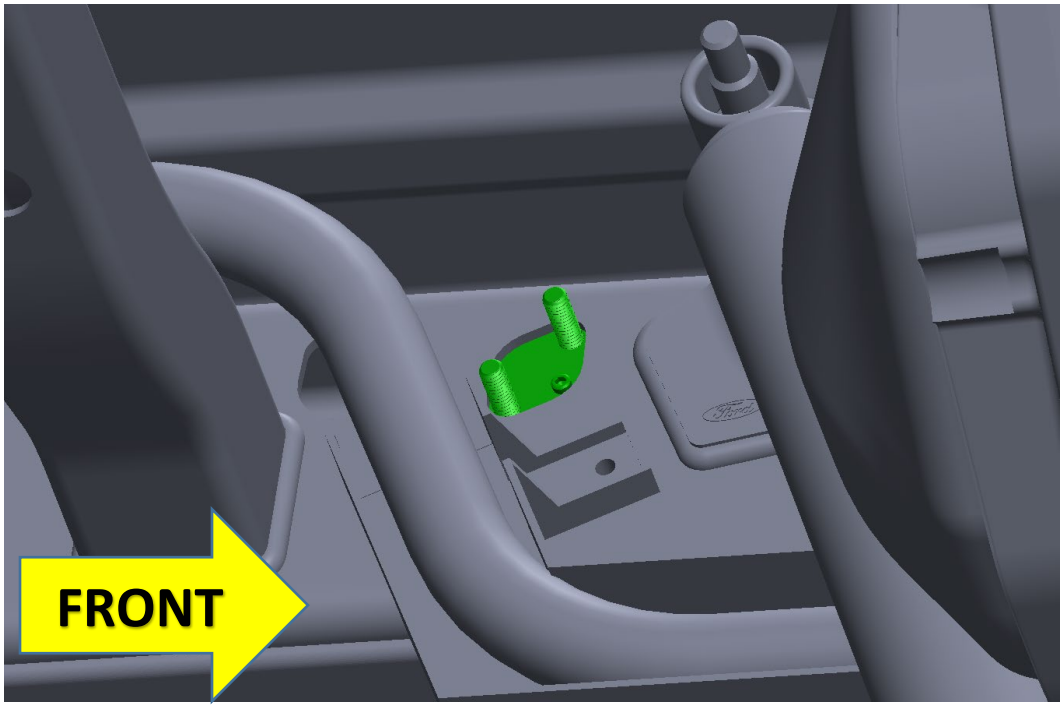

7. Insert Driver Side Bracket behind Wire Harness and over threaded studs, as shown below.

a. Install nuts and washers, but leave very loose.
b. Remove set screw by reversing out of through hole in Bracket.

NOTE: On some vehicles, this step may be easier to perform after step 9, when the passenger side bracket has been installed already.

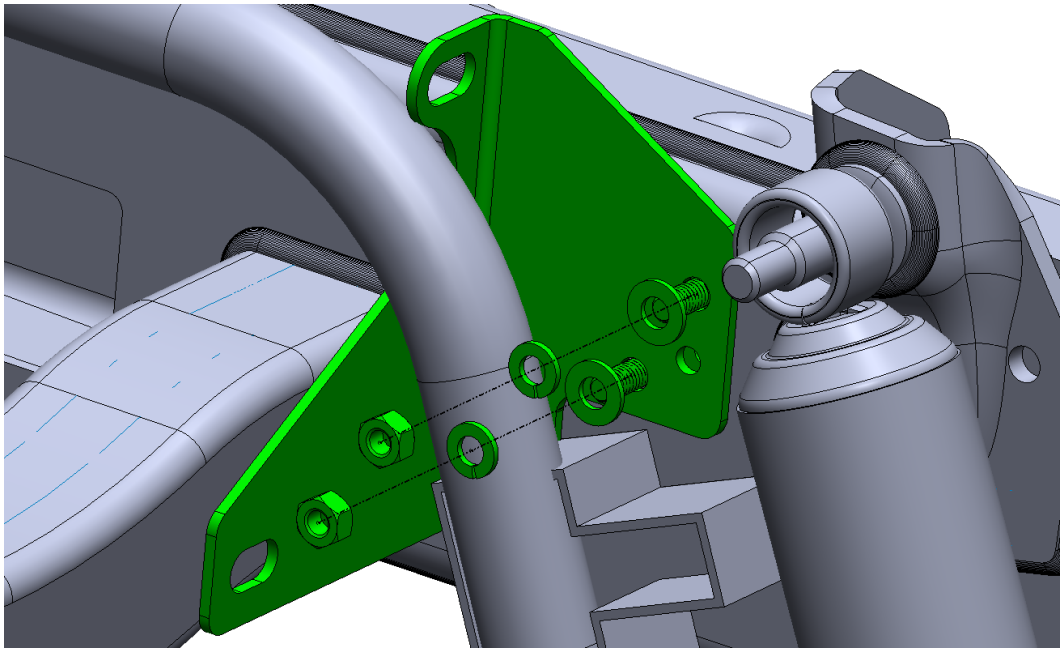

8. Insert (2) 7/16”-14 Hex Bolts and Washers, as shown below; apply tape to heads of bolts to prevent them from falling out of Bracket. Tape will be removed in end.

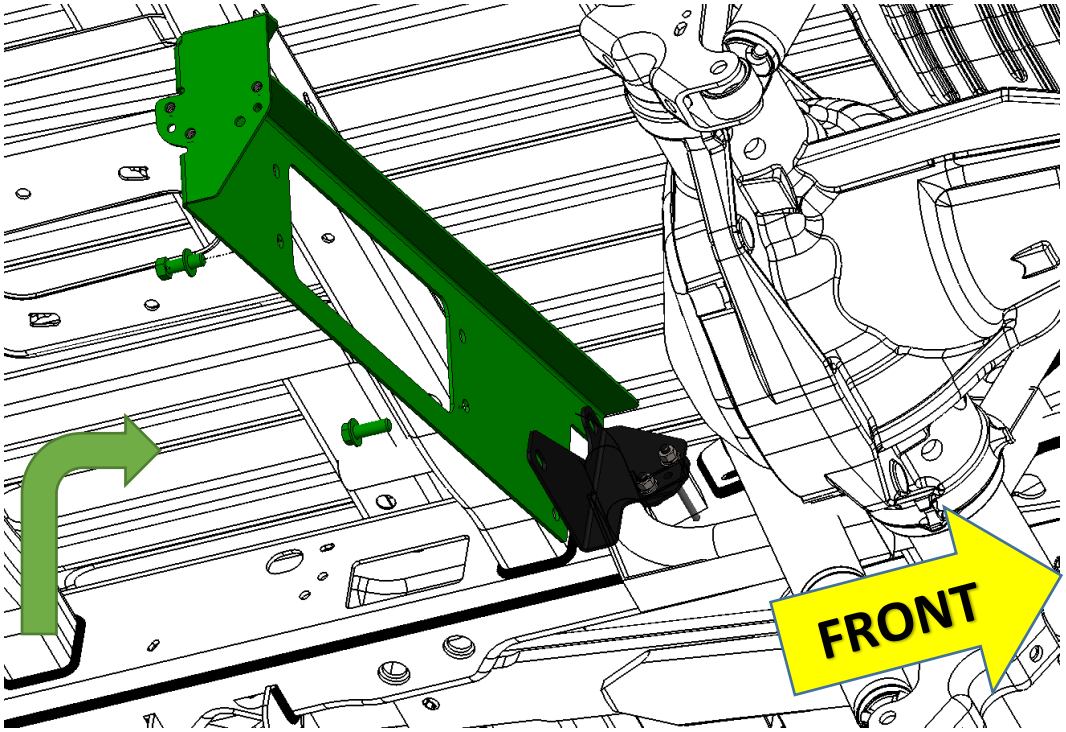

9. Install Passenger Side Bracket over threaded studs, as shown below.

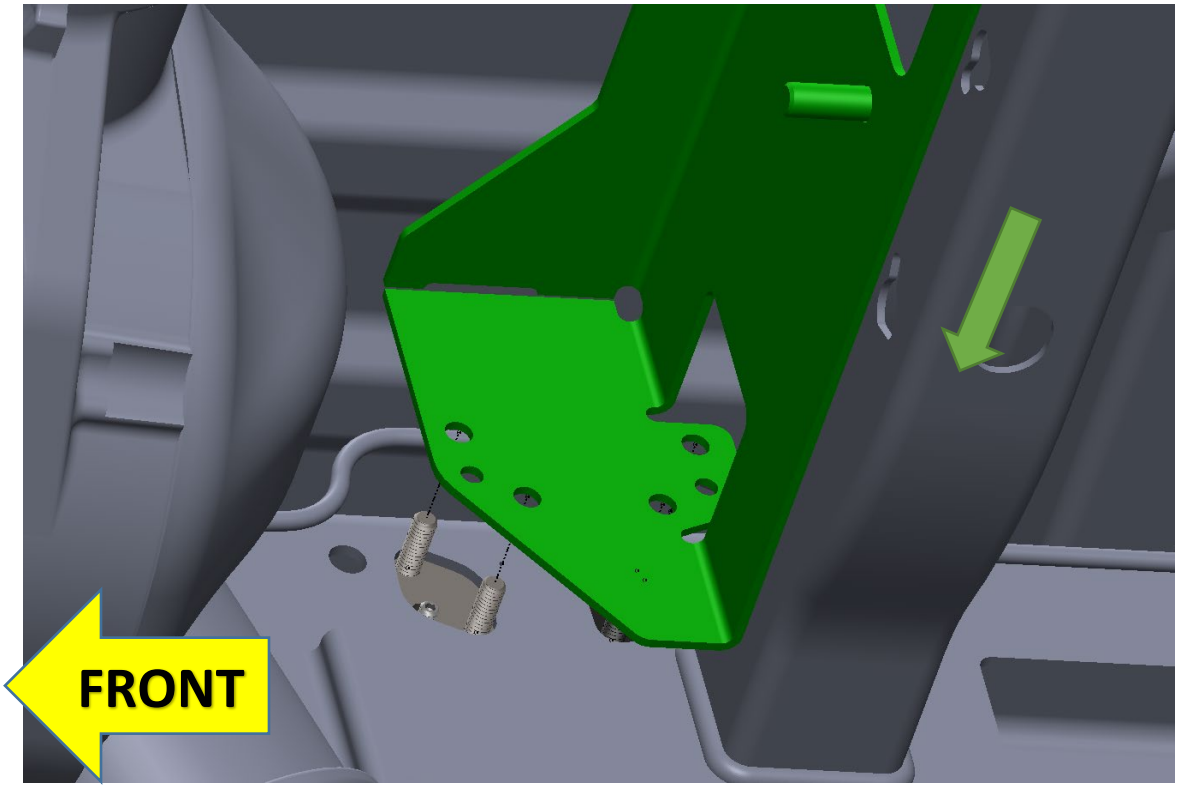

10. Pull both Passenger and Driver Side Bracket away from crossmember and insert 7/16”-14 Hex Bolts, washers, and nuts, as shown below

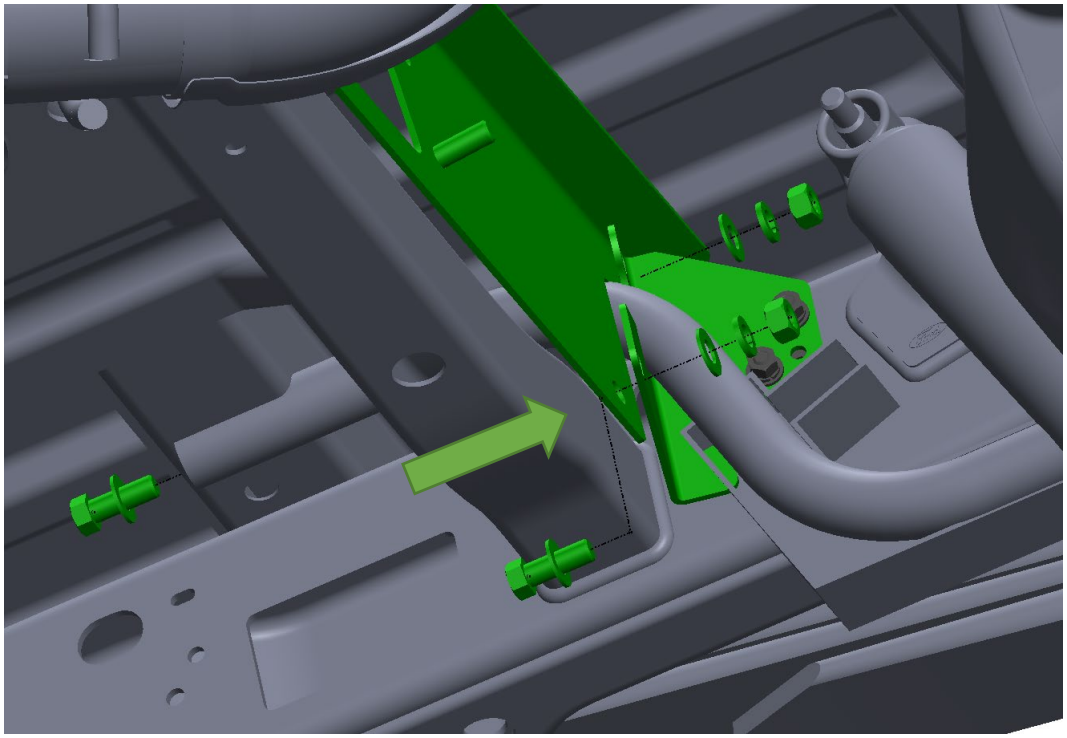

11. Final install Passenger Side Bracket, as shown below.
    a. Install nuts and washers, and torque as shown.
    b. Remove set screws by reversing out of through hole in Bracket.

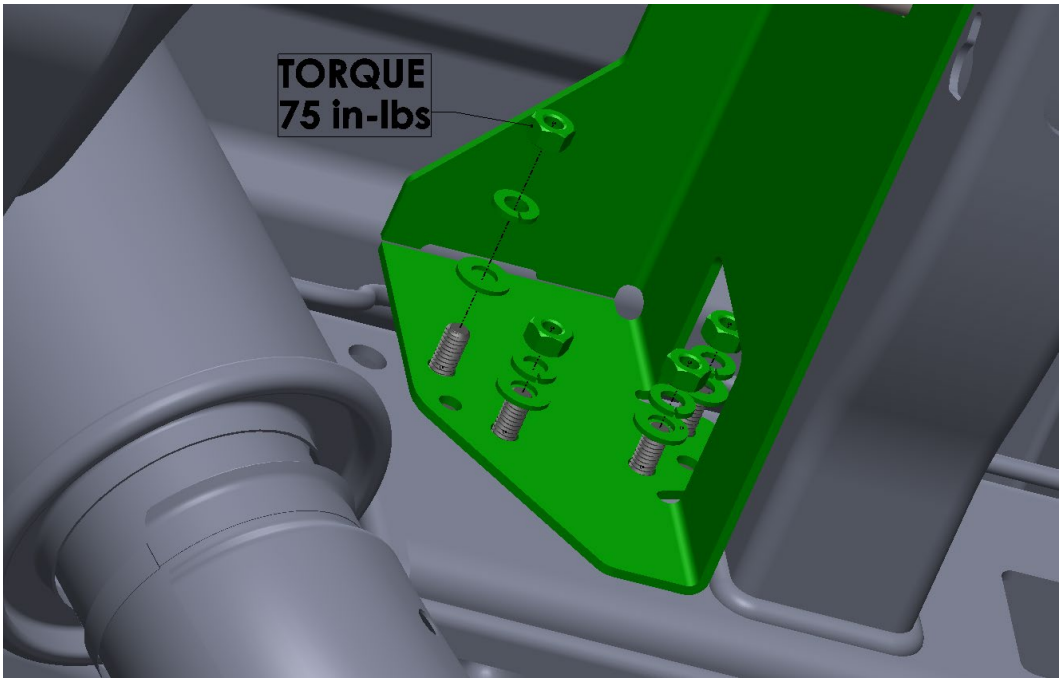

12. Final tighten Passenger Bracket, as shown below.
    a. Tighten frame side bolts first
    b. Tighten Bracket-to-Bracket bolts second

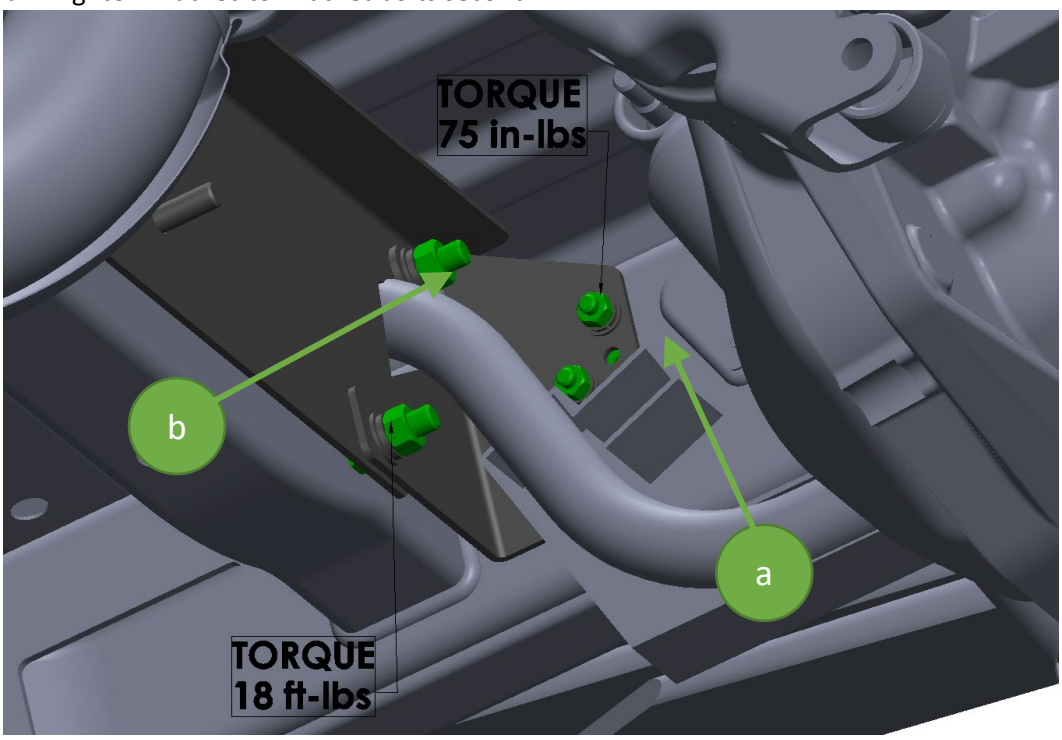

13. Install Air Tank to Bracket, as shown below using Tank Mounting Hardware kit
    a. Ensure Air Compressor leader hose is pushed through Bracket correctly

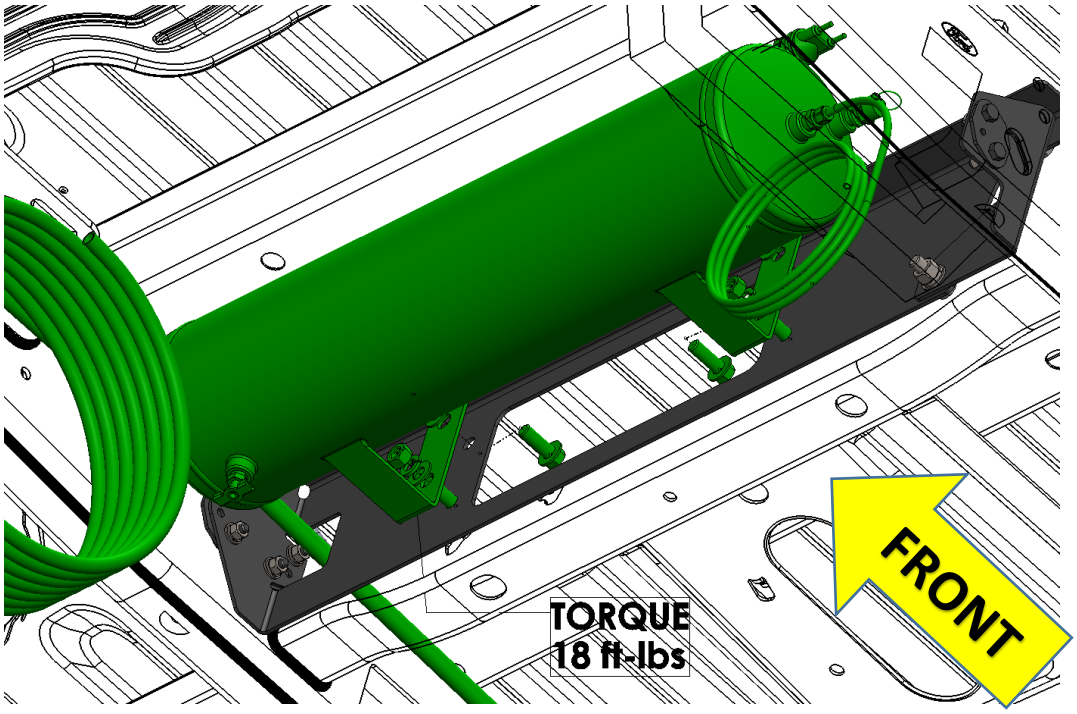

The Above Figure is Representative Only

9.2 Compressor and Bracket Installation

1. Attach Compressor bracket onto vehicle chassis, per below illustration.
    a. Ensure bracket is parallel to frame (i.e., level) and is NOT pinching 02 Sensor wire.
    b. Do NOT over torque bolt and deform, or crush frame

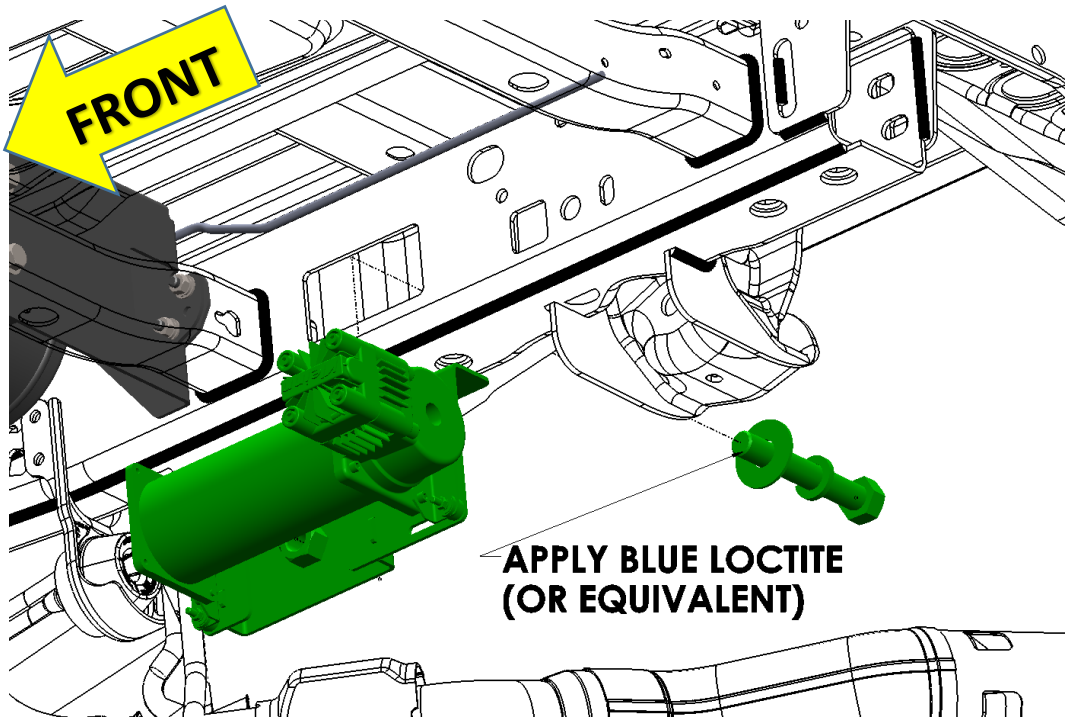

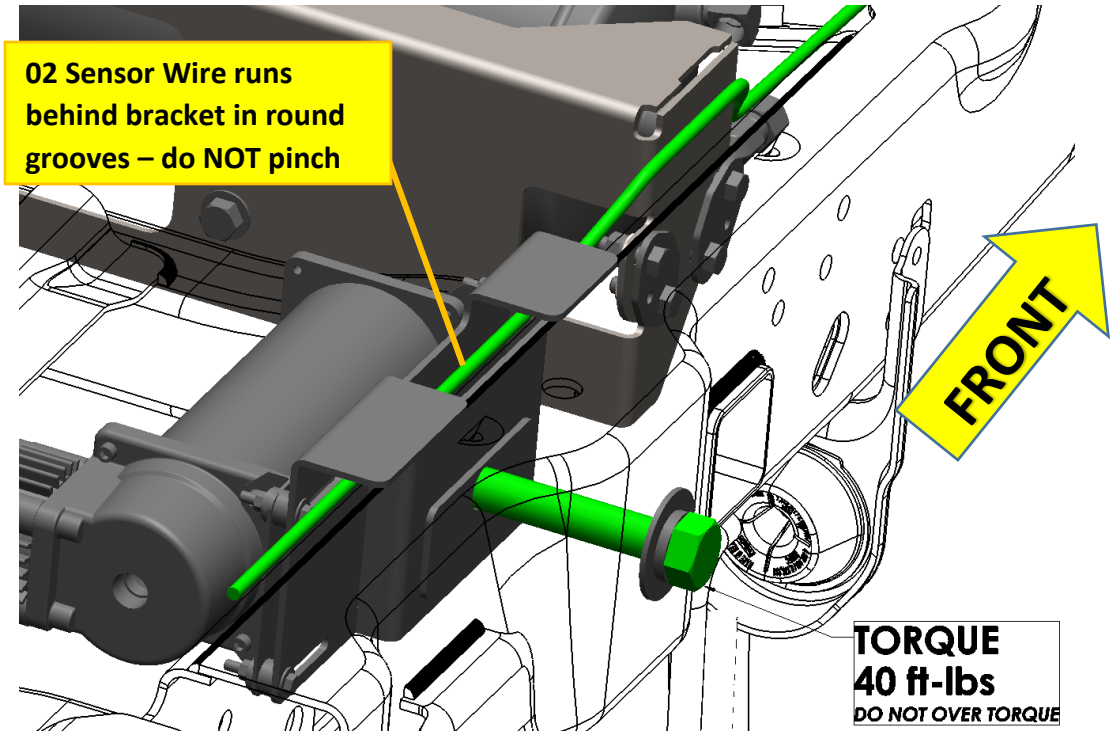

10 On Vehicle Air Line Installation

10.1 Suggested Routing Diagram for Horns, Air Tank and Air Compressor

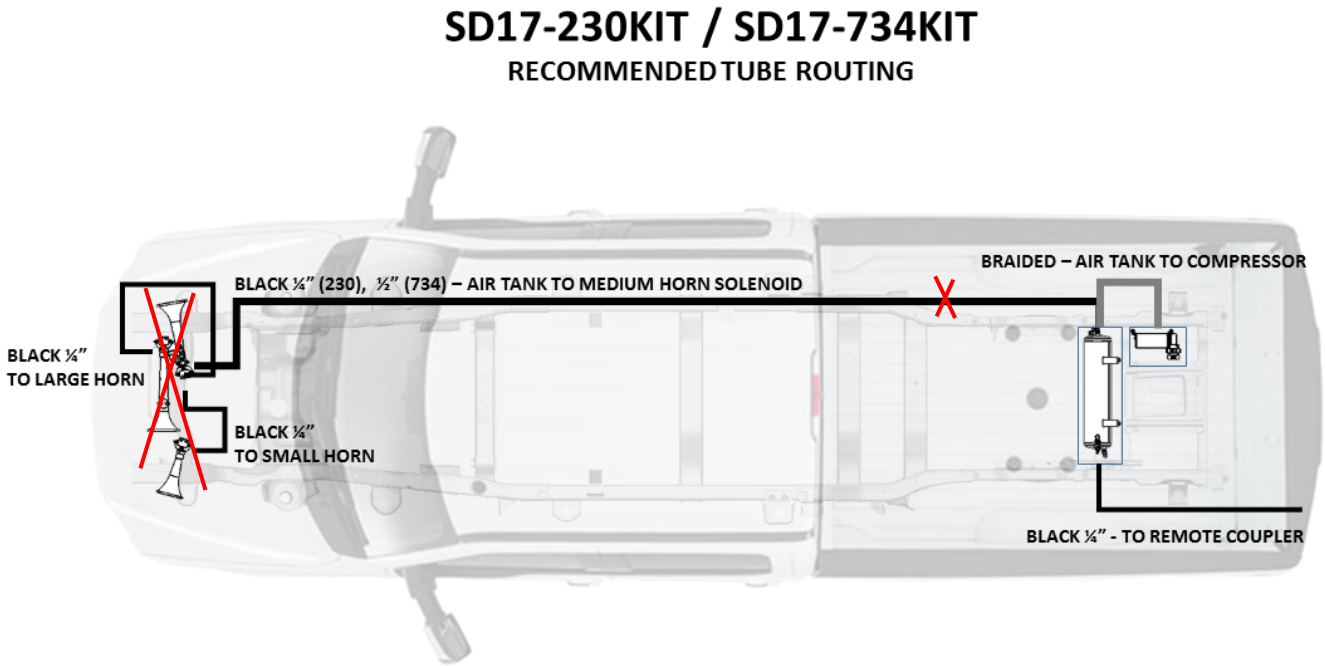

10.2 Connect Air Compressor to Air Tank

1. Re-install compressor leader hose (i.e., output hose) onto compressor head, using Kleinn juice.

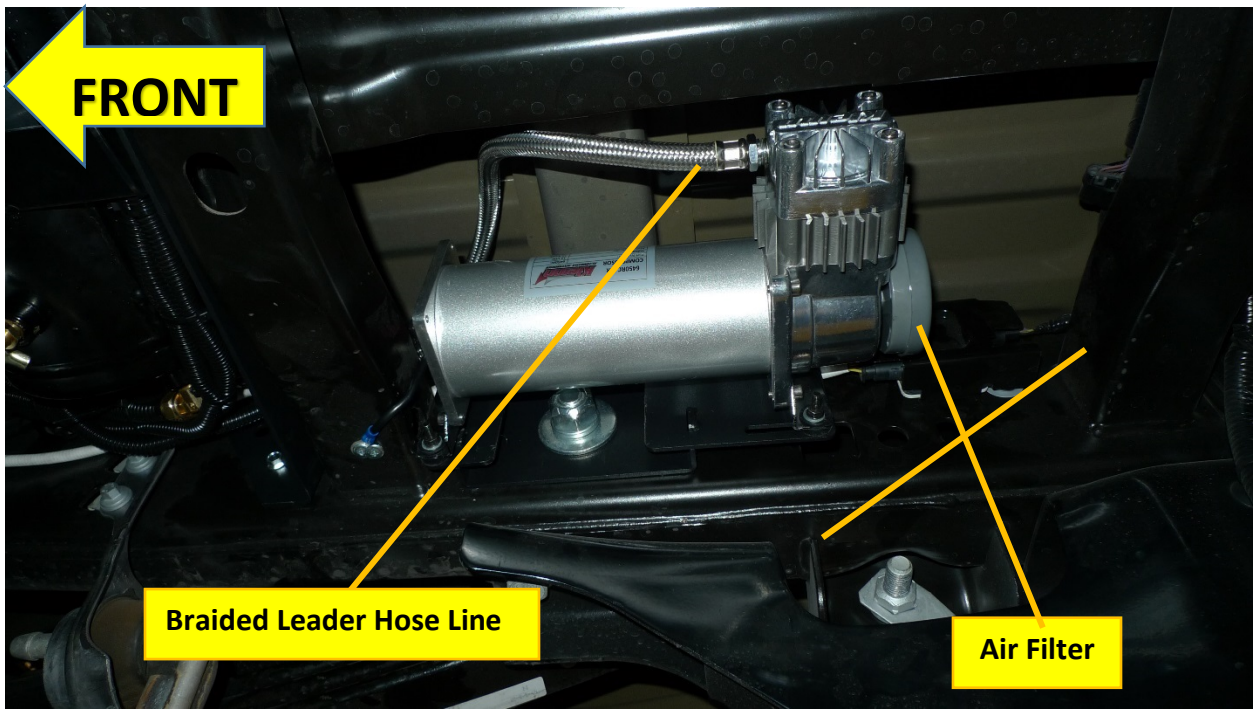

10.3 Attach Air Compressor Inlet Filter

1. Pry-open plastic air filter housing and install foam filter inside
2. Using included fittings, attached filter housing to front input of Air Compressor
    a. If preferred, air filter may be installed remotely in place farther away from road grime and water (i.e., inside covered bed, under hood, etc.)

11 Initial Testing of Kit

11.1 Reconnect Vehicle Battery(s)

CAUTION: *Before connecting vehicle battery(s), verify all wiring is properly connected and no shorts exists. Use of Multi-Meter, or Test Light is recommended to check continuity of all connections.*

11.2 Test Air Compressor

a. Turn vehicle ignition to on position and allow compressor to fill Air Tank. Initial fill may take approximately 1.5-3 minutes; Air Compressor should shut off automatically once full pressure is achieved.
b. If compressor runs excessively (i.e., 5 minutes or more), disconnect electrical power to Air Compressor and listen for air leaks in system. Repair any problems and retest; contact Kleinn technical support if problem persists.
c. Inspect all air line connections (i.e., Air Tank fittings, Quick Connect fittings, Air Horn fittings, etc.) for leaks by using a soap and water solution sprayed directly onto fittings
    a. System must be pressurized or at least Air Compressor running
d. If an air leak is found:
    a. Safely release air pressure from system (i.e., slowly open drain valve)
    b. Disassemble leaky connection, re-seal and reinstall fittings as needed

11.3 Test Train Horns

a. Allow Air Compressor to run and shut-off automatically (i.e., Air Tank is full)
b. Verify all tubing and electrical wire is securely fastened to vehicle, brackets, or kit parts; if necessary, use extra zip ties to hold tubing and wire in place
c. Ensure all nearby persons have adequate hearing protection and provide courtesy warning to neighbors or others in vicinity

WARNING: *NEVER operate train horns with ears close to trumpets or in an enclosed space without substantial hearing protection (i.e., > Ear Plugs and Ear Muffs) for all*

persons closer than 100 feet from vehicle. Never operate train horns outdoors when persons are near vehicle without adequate hearing protection.

a. Briefly activate Horns by pressing Horn Button for one (1) second; repeat three (3) times with a short rest period between (i.e., 1-3 seconds)
   i. Horns should sound as expected and be loud; click to listen to example 230 Kit
   ii. Horn sound/loudness will taper quickly as Air Tank loses pressure
b. Allow Air Compressor to refill tank, if needed and activate Horns for longer three (3) second period to ensure Horns are functioning properly.

11.4 Test Quick Connect Coupler

a. Allow Air Compressor to refill tank, if needed
b. Attach supplied INF-1 inflator kit to Quick Connect Coupler and verify adequate air pressure is available
   i. Test fill tires on vehicle, bicycle, etc.
   ii. Use Air Blow Gun
   iii. Use Air Impact Gun

11.5 Raise/Re-install Spare Tire

a. Reference vehicle owner's manual for specific instructions.

12 General Operation of Kit

12.1 Compressor Operation

WARNING: *Never operate Air Compressor above its MAXIMUM PRESSURE RATING (see label on body). Operation exceeding maximum pressure will damage Air Compressor and may result in Dangerous Air System failure.*

a. Air compressor is equipped with an automatic thermal overload protection circuit, designed to protect air compressor from overheating and causing permanent damage.
b. Automatic thermal overload protector will automatically reset after 30 minutes.
c. To prevent discharge of vehicle's battery and for best performance, keep vehicle's engine running while using air compressor for any prolonged use (i.e., filling tires, using air tools, etc.).

12.2 Horn Operation

a. Allow Air Compressor to run until it shuts off automatically (i.e., Air Tank is full), or for at least one minute in between horn activations.
b. Press Horn Button to activate Horns
   i. Horn sound/loudness will taper quickly as Air Tank loses pressure.
   ii. Horns should sound for 3-7 seconds depending on kit and tank size

WARNING: *NEVER operate train horns with ears close to trumpets or in an enclosed space without substantial hearing protection (i.e., > Ear Plugs and Ear Muffs) for all persons closer than 100 feet from vehicle. Never operate train horns outdoors when persons are near vehicle without adequate hearing protection.*

13 Routine Maintenance

Perform following steps at least once during recommended intervals.

1. Yearly, or every 12000 miles verify all mounting fasteners are properly torqued; applying witness marks across fasteners and mounting parts is good practice to quickly ensure fasteners have not moved.

2. Yearly, or every 12000 miles remove all road grime and mud from mounting brackets and kit parts using clean water from a garden hose; pay special attention to corners where dirt may collect. Touch up all paint chips using automotive grade enamel in either spray, or brush form.

   NOTE high pressure washers may damage part finishes and must be used with care. Do this more frequently if traveling regularly off-road, or in winter climates where road salts are used.

3. Yearly, or every 12000 miles check electrical and air fitting connections and wires for abrasion, corrosion, or other damage. Replace damaged components.

   NOTE: if system runs continuously or turns on unexpectedly, leaks or intermittent electrical connection may be present.

4. Monthly, or every 10 hours of compressor run time, drain moisture from air tank using drain valve installed at bottom of tank.

   WARNING: *Failure to regularly drain air tank may result in corrosion inside tank and possible failure in tank or air lines, which can suddenly release air pressure causing injury to nearby people.*

5. Yearly, or every 12000 miles clean, or replace air compressor air filter element. Replacement frequency depends on operating frequency and conditions of operating environment (i.e., daily use of air compressor in dusty, or wet environment requires more frequent filter change). Order replacement filters at Kleinn.com.

   NOTE: Never lubricate or add any liquids to the included oil-less air compressor.

14 Warranty Information

Thank you for purchasing this SD17OBA-6450. Shall you experience any unexpected problems during installation, or have problems with any part at any time please contact Kleinn support.

KLEINN MANUFACTURER LIMITED DEFECT WARRANTY:

Kleinn Automotive Air Horns warrants this product to the end-user, when properly installed and under normal conditions of use, to be free from defects in workmanship and materials for a period of one year from the provided date of purchase, to the original purchaser of the product. This warranty does not cover abuse, operation in a manner inconsistent with the product's design, or damage resulting from exposure to the elements. If the defect is considered "under warranty", Kleinn will, at its option, repair or replace the product free of charge to the original purchaser. Kleinn is not liable for any installation charges, loss or damage of any kind incurred in the replacement or repair of any warranted product.

© Kleinn Air Horns All rights reserved.
Phone: (520) 579-1531
Web: www.Kleinn.com